1. ALL RESISTANCE VALUES ARE IN OHMS, 0.1 WATT +/- 5%.
2. ALL CAPACITANCE VALUES ARE IN MICROFARADS.
3. ALL CRYSTALS & OSCILLATOR VALUES ARE IN HERTZ.

PART#	QTY	DESCRIPTION	REFERENCE DESIGNATOR(S)	CRITICAL	BOM OPTION
051-04464	1	SCHEM,MLB-A,YN,J171	SCH1	CRITICAL	
820-01686	1	PCBF,MLB-A,YN,J171	PCB1	CRITICAL	

J171 MLB_A

REV	ECN	DESCRIPTION OF REVISION	CK APPD / DATE
4	0016802072	ENGINEERING RELEASED	2019-03-25

LAST_MODIFICATION=Mon Mar 25 03:44:29 2019

PAGE	CSA	CONTENTS	SYNC	DATE
1	1	TABLE OF CONTENTS		
2	2	BLOCK DIAGRAM: SYSTEM	J171/MLB_B	10/24/2018
3	4	BOM TABLES	J171/MLB_B	10/24/2018
4	5	SOC: MISC & ALIASES	J171/MLB_B	10/24/2018
5	6	NAND	J171/MLB_B	10/24/2018
6	7	SOC:JTAG,USB,XTAL	J171/MLB_B	10/24/2018
7	8	SOC:PCIE	J171/MLB_B	10/24/2018
8	9	SOC:MIPI AND ISP	J171/MLB_B	10/24/2018
9	10	SOC:LPDP	J171/MLB_B	10/24/2018
10	11	SOC:SERIAL	J171/MLB_B	10/24/2018
11	12	SOC:GPIO & UART	J171/MLB_B	10/24/2018
12	13	SOC:AOP	J171/MLB_B	10/24/2018
13	14	SOC:POWER (1/3)	J171/MLB_B	10/24/2018
14	15	SOC:POWER (2/3)	J171/MLB_B	10/24/2018
15	16	SOC:POWER (3/3)	J171/MLB_B	10/24/2018
16	17	IO: TRISTAR & ORION	J171/MLB_B	11/14/2018
17	18	AUDIO: HP/DMIC FLEX CONNS	J171/MLB_B	10/24/2018
18	19	AUDIO: CLIFDEN & BELFIELD	J171/MLB_B	10/24/2018
19	20	AUDIO: SPEAKER AMPS LEFT	J171/MLB_B	10/24/2018
20	21	AUDIO: SPEAKER AMPS RIGHT	J171/MLB_B	10/24/2018
21	22	SENSOR: MESA SUPPORT	J171/MLB_B	10/24/2018
22	23	SENSOR: MESA BOOST	J71B_MLB_B1	07/23/2018
23	25	SENSOR: KOBOL, PHOS	J171/MLB_B	10/24/2018
24	26	IO: BUTTON FLEX CONN / HES	J171/MLB_B	10/24/2018
25	27	CAMERA: FF AND ALS CONN	J171/MLB_B	10/24/2018
26	29	CAMERA: REAR CONN & FILTERS	J171/MLB_B	10/24/2018
27	30	TOUCH: KONA #1	J71B_MLB_B1	07/23/2018
28	31	TOUCH: KONA #2	J171/MLB_B	10/24/2018
29	32	TOUCH: CONNS	J71B_MLB_B1	07/23/2018
30	37	IO: FLEX HOTBAR & FILTERS	J171/MLB_B	10/24/2018
31	38	BTN: HOME & MESA	J171/MLB_B	10/24/2018
32	41	DISPLAY: EDP CONN	J171/MLB_B	10/24/2018
33	49	RADIOS: ALIASES	J171/MLB_B	10/24/2018
34	70	VENUS	J171/MLB_B	10/24/2018
35	75	WIFI/BT: MODULE	J171/MLB_B	10/24/2018
36	77	WIFI/BT: J171 FRONT END	J171/MLB_A	10/24/2018
37	81	POWER: ANGEL (1/5)	J171/MLB_B	10/24/2018
38	82	POWER: ANGEL (2/5)	J171/MLB_B	10/24/2018
39	83	POWER: ANGEL (3/5)	J171/MLB_B	10/24/2018
40	84	POWER: ANGEL (4/5)	J171/MLB_B	10/24/2018
41	85	POWER: ANGEL (5/5)	J171/MLB_B	10/24/2018
42	86	POWER: EXTERNAL SWITCHES & LDOS	J171/MLB_B	10/24/2018
43	87	POWER: BUCKS 4,5,8	J171/MLB_B	10/24/2018
44	88	BEACON2	J171/MLB_B	10/24/2018
45	89	POWER: BATTERY CONNECTOR	J171/MLB_B	10/24/2018
46	93	TEST: TP/HOLES/FIDUCIALS	J171/MLB_B	10/24/2018
47	94	TEST: EE TP/PP	J171/MLB_B	10/24/2018
48	121	POWER: ALIASES	J171/MLB_B	10/24/2018

TABLE OF CONTENTS

SYNC_MASTER=J71S_MLB_B SYNC_DATE=11/06/2016

DRAWING TITLE: SCHEM,MLB-A,YN,J171

Apple Inc.

DRAWING NUMBER: 051-04464 SIZE: D

REVISION: 4.0.0

BRANCH:

PAGE: 1 OF 121

SHEET: 1 OF 48

NOTICE OF PROPRIETARY PROPERTY:
THE INFORMATION CONTAINED HEREIN IS THE PROPRIETARY PROPERTY OF APPLE INC.
THE POSESSOR AGREES TO THE FOLLOWING:
I TO MAINTAIN THIS DOCUMENT IN CONFIDENCE
II NOT TO REPRODUCE OR COPY IT
III NOT TO REVEAL OR PUBLISH IT IN WHOLE OR PART
IV ALL RIGHTS RESERVED

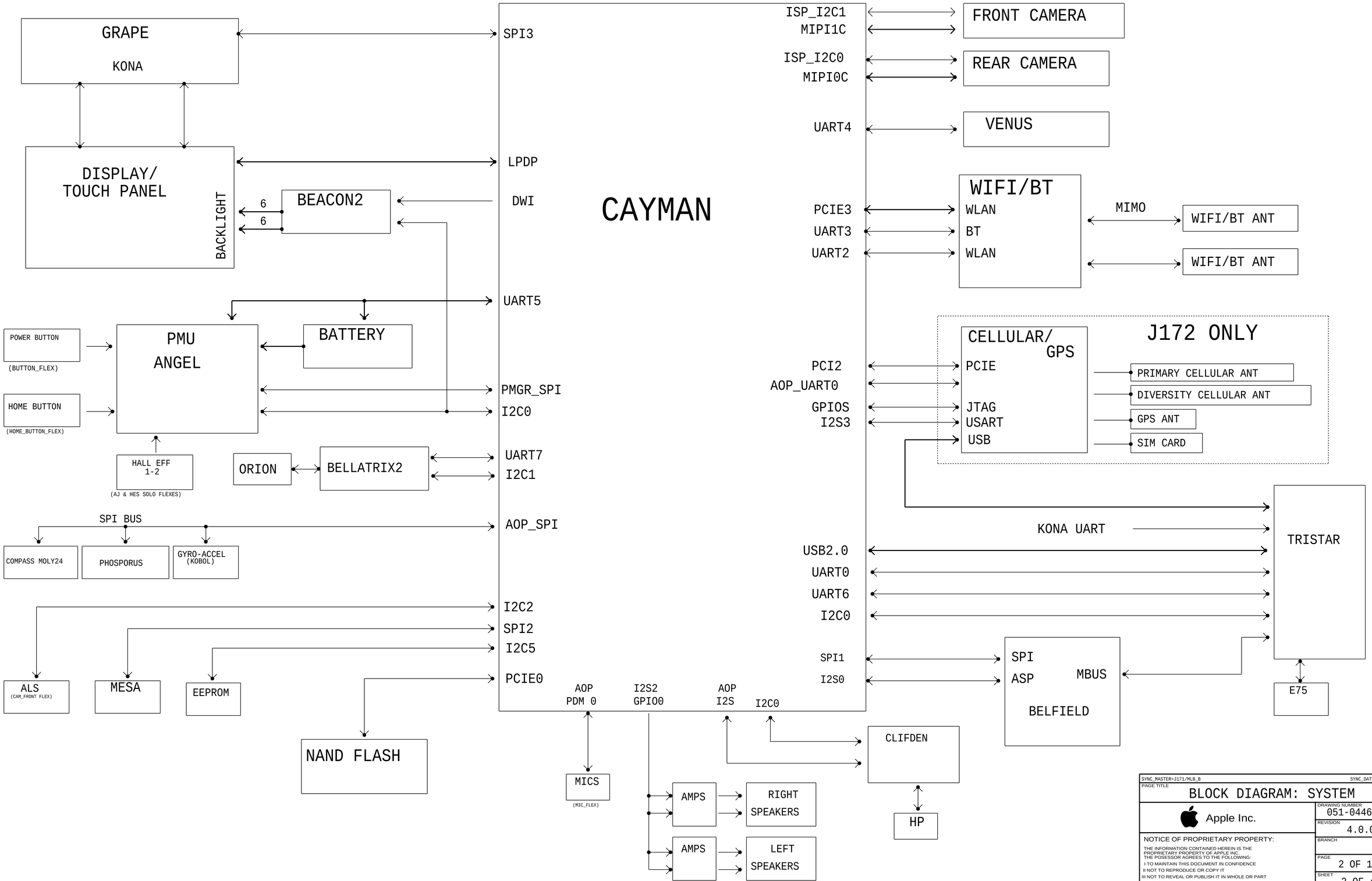

SYNC_MASTER=J171/MLB_B SYNC_DATE=10/24/2018

PAGE TITLE

BLOCK DIAGRAM: SYSTEM

Apple Inc.

DRAWING NUMBER 051-04464 SIZE D

REVISION 4.0.0

BRANCH

PAGE 2 OF 121

SHEET 2 OF 48

NOTICE OF PROPRIETARY PROPERTY:

THE INFORMATION CONTAINED HEREIN IS THE PROPRIETARY PROPERTY OF APPLE INC.
THE POSESSOR AGREES TO THE FOLLOWING:

I TO MAINTAIN THIS DOCUMENT IN CONFIDENCE

II NOT TO REPRODUCE OR COPY IT

III NOT TO REVEAL OR PUBLISH IT IN WHOLE OR PART

IV ALL RIGHTS RESERVED

Page Notes

Power aliases required by this page:
(NONE)

Signal aliases required by this page:
(NONE)

BOM options provided by this page:

SOC

PART#	QTY	DESCRIPTION	REFERENCE DESIGNATOR(S)	CRITICAL	BOM OPTION
339S00485	1	POP,CAYMAN+2GB 20NM,B1,A12,BN1,M,CSP1407	U0700	CRITICAL	

2GB MICRON BN1 B1A12

PART NUMBER	ALTERNATE FOR PART NUMBER	BOM OPTION	REF DES	COMMENTS:
339S00487	339S00485		U0700	2GB,HYNIX,BN1,B1A12
339S00488	339S00485		U0700	2GB,MICRON,BNX,B1A12
339S00489	339S00485		U0700	2GB,HYNIX,BNX,B1A12
339S00612	339S00485		U0700	3GB,MICRON,BN1,B1DEV
339S00613	339S00485		U0700	3GB,HYNIX,BN1,B1DEV
339S00614	339S00485		U0700	3GB,MICRON,BNX,B1DEV
339S00615	339S00485		U0700	3GB,HYNIX,BNX,B1DEV
339S00367	339S00485		U0700	2GB,HYNIX,BN1,B1DEV
339S00365	339S00485		U0700	2GB,MICRON,BNX,B1DEV
339S00369	339S00485		U0700	2GB,HYNIX,BN1,B1DEV
339S00364	339S00485		U0700	2GB,HYNIX,BNX,B1DEV

PART NUMBER	ALTERNATE FOR PART NUMBER	BOM OPTION	REF DES	COMMENTS:	
155S00007	155S0667				
L2710,L2711,L2910,L2911,L2912,L2913,L2920					
138S00049	138S0831		C0610,C0600,...	2.2UF 0201	RDAR #22885449
138S00048	138S00003		C0160,C0161,...	15UF	
138S0945	138S0739		C1760,...	1UF	
138S0706	138S0739		C1760,...	1UF	
376S00071	376S00070		Q0504		
376S00159	376S1211		Q0550		
376S0948	376S00076		Q0900		
197S0369	197S0392		Y0300	32.768K XTAL	RDAR #24177192
155S00097	155S0664		FL2700,...	FILTER_2P	RDAR #23399925
155S00341	155S0755		FL4190	FERRITE BEAD	RDAR #23169091
155S00016	155S0686		L1800,...	FILTER_2P	
155S00342	155S0453		FL2290-FL2292,FL2295,FL2296	FILTER_2P	
155S00200	155S00400		FL2580,...	FILTER_2P	
138S0786	138S0847		C5905	10UF	RDAR #24161406
138S0864	138S0709		C8547,...	4.7UF	RDAR #23320528
138S0875	138S0678		C81A0,...	10UF	
335S00013	335S0894		U5403	EEPROM	
335S00066	335S0946		U5103	EEPROM	
131S00150	131S0890		C2285,C2302		
132S00088	132S0639		C3023,C3032		
138S00086	138S0884		C8204		
138S00024	138S0986				C1404,07,11,16-17,21,26,32-33 C1437,40,60-61; C1503, C7502
371S00118	371S00117		D3001		
376S00030	376S1131		Q1770		
377S0116	377S00132		D23700		
128S00067	128S00094		CB1C0,CB1C1,CB1C2		
132S00154	132S0683				C30001-05,08-10,19,28
155S00402	155S0511				L1900-05
155S00232	155S0665				FL1850-51, L4180,85
197S00120	197S0612		Y9700		
197S00118	197S0612		Y9700		
131S00172	131S00164		CB820,CB821	220PF	
131S00173	131S00164		CB820,CB821	220PF	
371S00173	371S0644		D8500		
371S00172	371S0490		D8801,D8802		
138S00117	138S00071		C1650		RADAR #38087795
376S00181	376S1211		Q8550		RADAR #38811594
376S00311	376S1211		Q8550		RADAR #39803629
131S00172	131S00164		ALL		ALTS ADDED FOR P1 OK2FAB
131S00173	131S00164		ALL		
131S00366	131S00229		ALL		
806-13579	806-19792		ALL		

BOM NUMBER	BOM NAME	BOM OPTIONS
639-06887	PCBA,MLB-A,BETTER,YN,X1596	COMMON,ALTERNATE,MLB_A,EEEE_J171_BTR,ACC_PWR_MAX_1A,32GB
639-06888	PCBA,MLB-A,BEST,YN,X1596	COMMON,ALTERNATE,MLB_A,EEEE_J171_BEST,ACC_PWR_MAX_1A,64GB
639-06889	PCBA,MLB-A,ULTIMATE,YN,X1596	COMMON,ALTERNATE,MLB_A,EEEE_J171_ULT,ACC_PWR_MAX_1A,128GB

FLASH CONFIGURATIONS

	PART#	QTY	DESCRIPTION	REFERENCE DESIGNATOR(S)	CRITICAL	BOM OPTION
TOSHIBA	335S00307	1	NAND,3DV3,32GBT,XXX,S3E,128G,T,SLGA70	U0601	CRITICAL	32GB
WESTERN DIGITAL	335S00311	1	NAND,3DV3,64GBT,XXX,S3E,128G,SD,SLGA70	U0601	CRITICAL	64GB
TOSHIBA	335S00314	1	NAND,3DV3,128GBT,XXX,S3E,256G,T,SLGA70	U0601	CRITICAL	128GB
HYNIX	335S00156	1	NAND,3DV3,256GBT,S3E,256G,H,SLGA70	U0601	CRITICAL	256GB
	138S0867	5	CAP,X5R,10UF,20%,6.3V,0.65MM,HRZTL,0402	C0648,C0613,C0616,C0621,C0633	CRITICAL	32GB
	138S00003	5	CAP,X5R,15UF,20%,6.3V,0.65MM,HRZTL,0402	C0648,C0613,C0616,C0621,C0633	CRITICAL	64GB
	138S00003	5	CAP,X5R,15UF,20%,6.3V,0.65MM,HRZTL,0402	C0648,C0613,C0616,C0621,C0633	CRITICAL	128GB
	138S00003	5	CAP,X5R,15UF,20%,6.3V,0.65MM,HRZTL,0402	C0648,C0613,C0616,C0621,C0633	CRITICAL	256GB

BICS3

PART NUMBER	ALTERNATE FOR PART NUMBER	BOM OPTION	REF DES	COMMENTS:	
335S00309	335S00307		U0601	WD 32G 3D-TLC 2DP	BICS3
335S00346	335S00314		U0601	WD 128G 3DV3	RADAR #37810147

NEED NEW APNS FOR ALL BELOW PD PARTS

MECHANICAL PARTS

PART#	QTY	DESCRIPTION	REFERENCE DESIGNATOR(S)	CRITICAL	BOM OPTION
806-19792	1	FENCE,AP_BCUT,YN,J171	PD_FENCE_AP	CRITICAL	
806-13581	1	CAN,TINY,J71B	PD_TINY_CAN	CRITICAL	

BARCODE LABEL/EEEE CODES

PART#	QTY	DESCRIPTION	REFERENCE DESIGNATOR(S)	CRITICAL	BOM OPTION
825-7639	1	EEEE FOR BETTER	L2K8	CRITICAL	EEEE_J171_BTR
825-7639	1	EEEE FOR BEST	L2KM	CRITICAL	EEEE_J171_BEST
825-7639	1	EEEE FOR ULTIMATE	L2L0	CRITICAL	EEEE_J171_ULT

ANGEL

PART#	QTY	DESCRIPTION	REFERENCE DESIGNATOR(S)	CRITICAL	BOM OPTION
343S00314	1	IC,PMU,ANGEL,D2365A0,OTP-DC,WLCSP361	U8100	CRITICAL	

SPEAKER AMPS

PART#	QTY	DESCRIPTION	REFERENCE DESIGNATOR(S)	CRITICAL	BOM OPTION
353S01608	1	IC,MAX98357B,PWR AMP,AUDIO,CLASS D,WLP9	U2020,U2040,U2120,U2140	CRITICAL	

SYNC_MASTER=J171/MLB_B SYNC_DATE=10/24/2018

PAGE TITLE
BOM TABLES

Apple Inc.

DRAWING NUMBER 051-04464 SIZE D
REVISION 4.0.0
BRANCH
PAGE 4 OF 121
SHEET 3 OF 48

NOTICE OF PROPRIETARY PROPERTY:
THE INFORMATION CONTAINED HEREIN IS THE PROPRIETARY PROPERTY OF APPLE INC.
THE POSESSOR AGREES TO THE FOLLOWING:
I TO MAINTAIN THIS DOCUMENT IN CONFIDENCE
II NOT TO REPRODUCE OR COPY IT
III NOT TO REVEAL OR PUBLISH IT IN WHOLE OR PART
IV ALL RIGHTS RESERVED

BOOT CONFIG ID

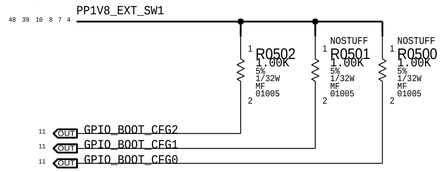

BOOT_CFG[2:0]	MODE
000	SPI0
001	SPI0 TEST MODE
010	NVME0 X2 MODE
011	NVME0 X2 TEST MODE
100	NVME0 X1 MODE
101	NVME0 X1 TEST MODE
110	SLOW SPI0 TEST MODE
111	FAST SPI0 TEST MODE

CURRENT SETTING ---> 100

S/W READ FLOW

1. SET GPIO AS INPUT
2. DISABLE PU AND ENABLE PD
3. READ

BOARD ID

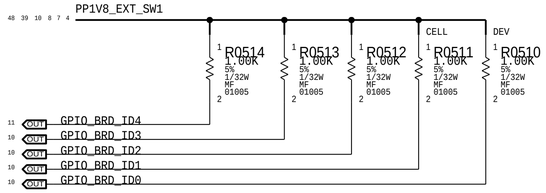

BRD_ID[4-0]	
11100	J171 AP (WIFI)
11101	J171 DEV
11110	J172 AP (CELL)
11111	J172 DEV

RDAR//PROBLEM/43583487

BOARD REVISION

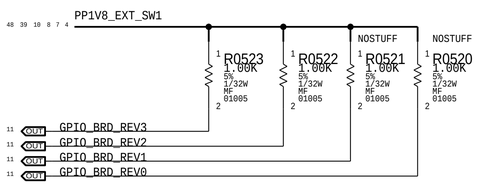

BRD_REV[3-0]	
1111	PROTO 1
1110	PROTO 2 US
1101	PRE-EVT (PREVIOUSLY P2 CHINA)
---> 1100	EVT
1011	DVT
1010	PVT

S/W READ FLOW

1. SET GPIO AS INPUT
2. ENABLE PD AND DISABLE PU
3. READ

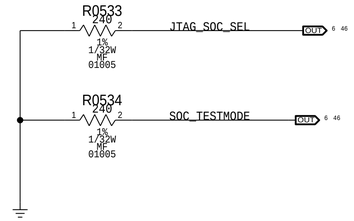

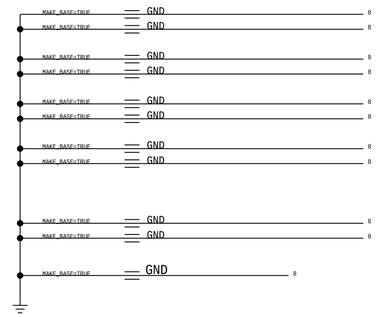

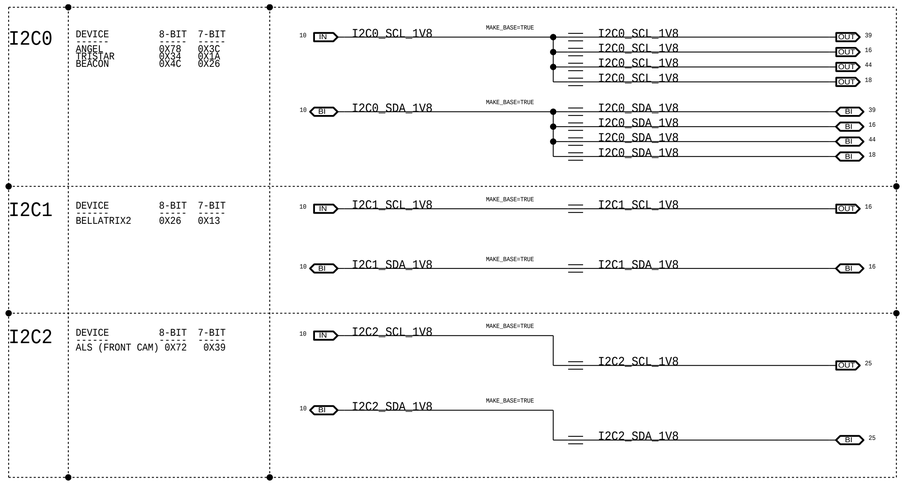

SYNC_MASTER=J171/MLB_B SYNC_DATE=10/24/2018

PAGE TITLE

SOC: MISC & ALIASES

Apple Inc.

DRAWING NUMBER 051-04464 SIZE D

REVISION 4.0.0

BRANCH

PAGE 5 OF 121

SHEET 4 OF 48

NOTICE OF PROPRIETARY PROPERTY:

THE INFORMATION CONTAINED HEREIN IS THE PROPRIETARY PROPERTY OF APPLE INC.
THE POSESSOR AGREES TO THE FOLLOWING:

I TO MAINTAIN THIS DOCUMENT IN CONFIDENCE
II NOT TO REPRODUCE OR COPY IT
III NOT TO REVEAL OR PUBLISH IT IN WHOLE OR PART
IV ALL RIGHTS RESERVED

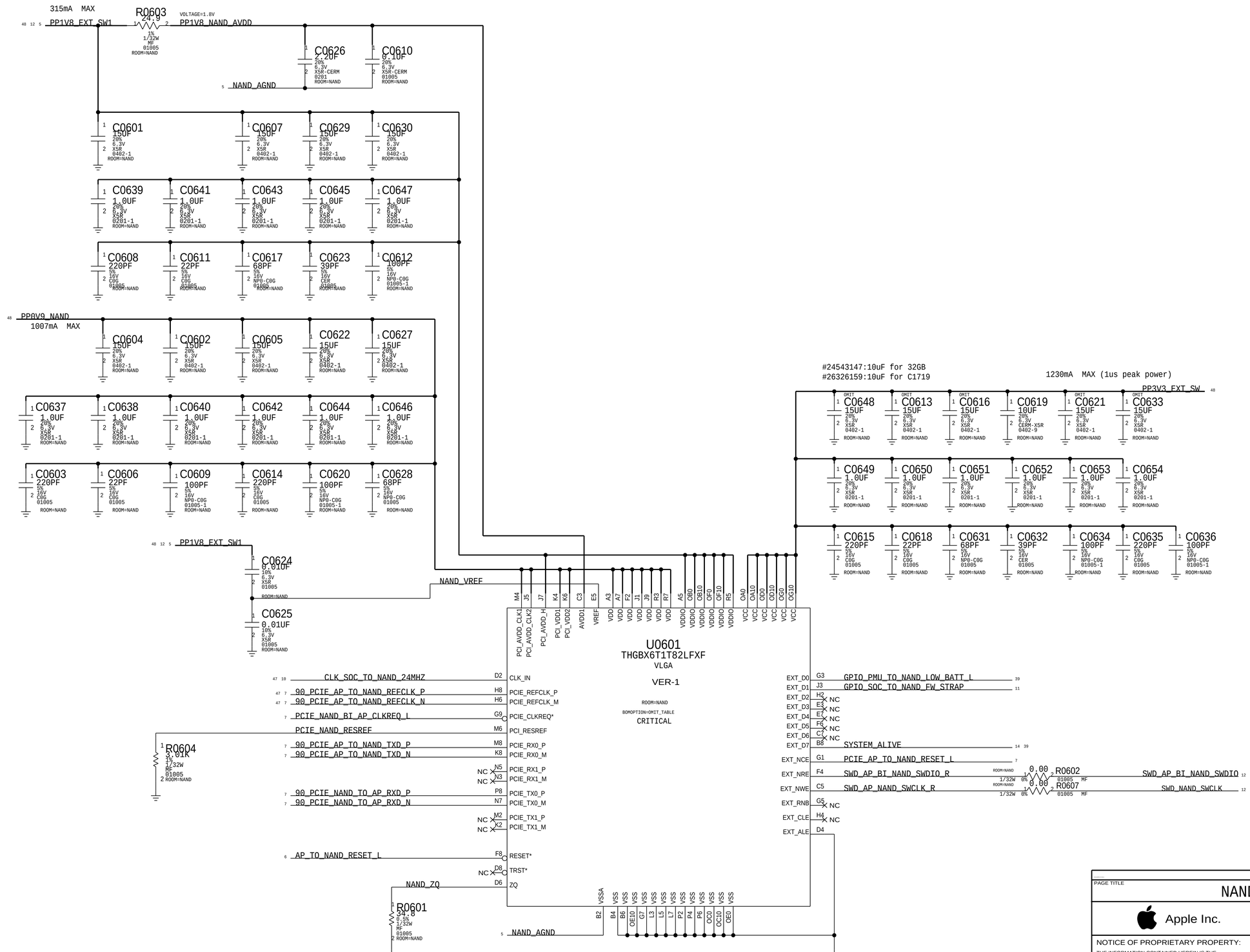

PAGE TITLE

NAND

Apple Inc.

DRAWING NUMBER	051-04464
SIZE	D
REVISION	4.0.0
BRANCH	
PAGE	6 OF 121
SHEET	5 OF 48

NOTICE OF PROPRIETARY PROPERTY:

THE INFORMATION CONTAINED HEREIN IS THE PROPRIETARY PROPERTY OF APPLE INC.
THE POSESSOR AGREES TO THE FOLLOWING:

I TO MAINTAIN THIS DOCUMENT IN CONFIDENCE
II NOT TO REPRODUCE OR COPY IT
III NOT TO REVEAL OR PUBLISH IT IN WHOLE OR PART
IV ALL RIGHTS RESERVED

SOC - USB, JTAG, XTAL

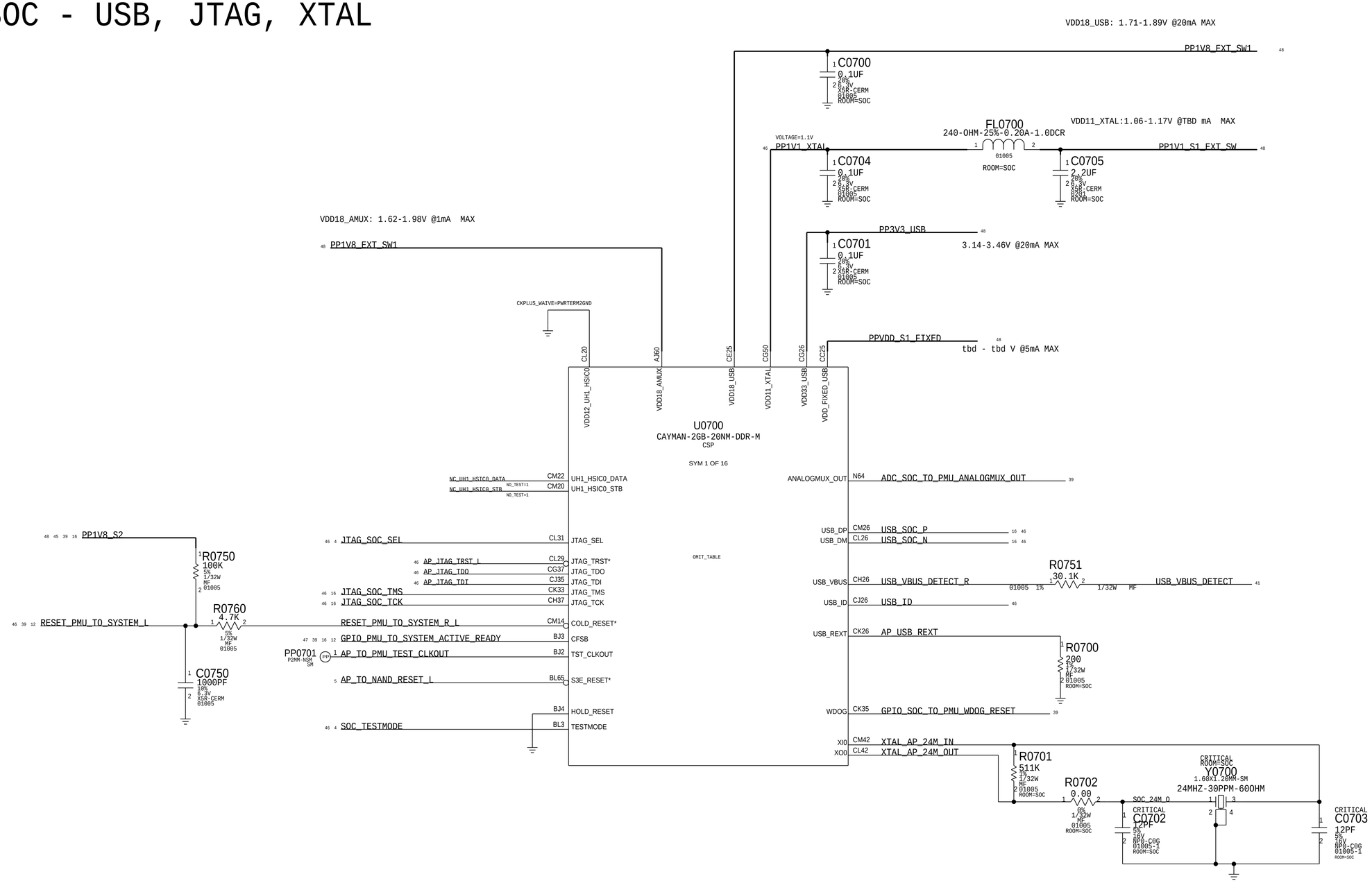

PAGE TITLE
SOC:JTAG,USB,XTAL

Apple Inc.

DRAWING NUMBER 051-04464 SIZE D
REVISION 4.0.0
BRANCH
PAGE 7 OF 121
SHEET 6 OF 48

NOTICE OF PROPRIETARY PROPERTY:
THE INFORMATION CONTAINED HEREIN IS THE PROPRIETARY PROPERTY OF APPLE INC.
THE POSESSOR AGREES TO THE FOLLOWING:
I TO MAINTAIN THIS DOCUMENT IN CONFIDENCE
II NOT TO REPRODUCE OR COPY IT
III NOT TO REVEAL OR PUBLISH IT IN WHOLE OR PART
IV ALL RIGHTS RESERVED

SOC - PCIE INTERFACES

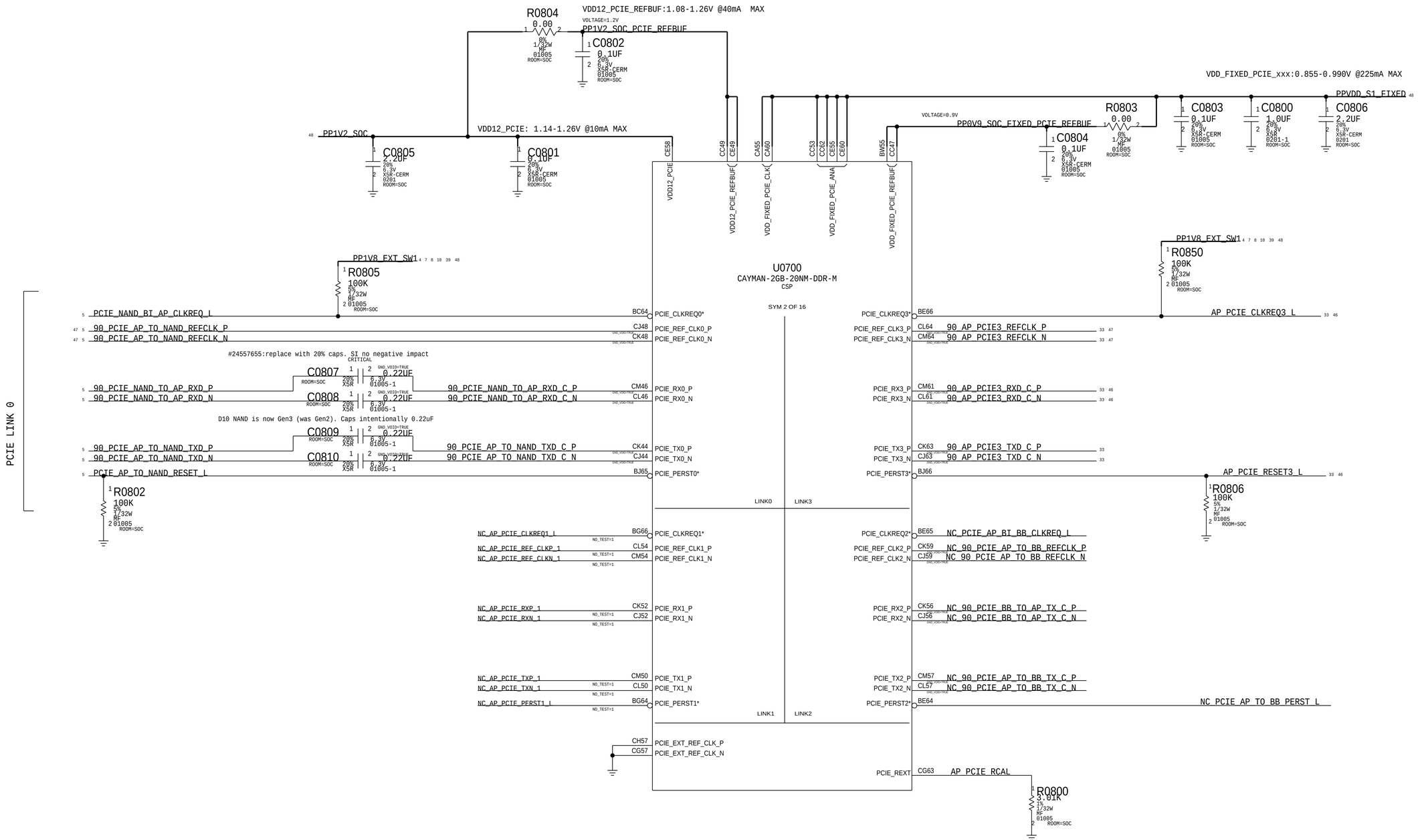

PAGE TITLE

SOC:PCIE

Apple Inc.

DRAWING NUMBER 051-04464

SIZE D

REVISION 4.0.0

BRANCH

PAGE 8 OF 121

SHEET 7 OF 48

NOTICE OF PROPRIETARY PROPERTY:

THE INFORMATION CONTAINED HEREIN IS THE PROPRIETARY PROPERTY OF APPLE INC.
THE POSESSOR AGREES TO THE FOLLOWING:

I TO MAINTAIN THIS DOCUMENT IN CONFIDENCE

II NOT TO REPRODUCE OR COPY IT

III NOT TO REVEAL OR PUBLISH IT IN WHOLE OR PART

IV ALL RIGHTS RESERVED

SOC - MIPI & ISP INTERFACES

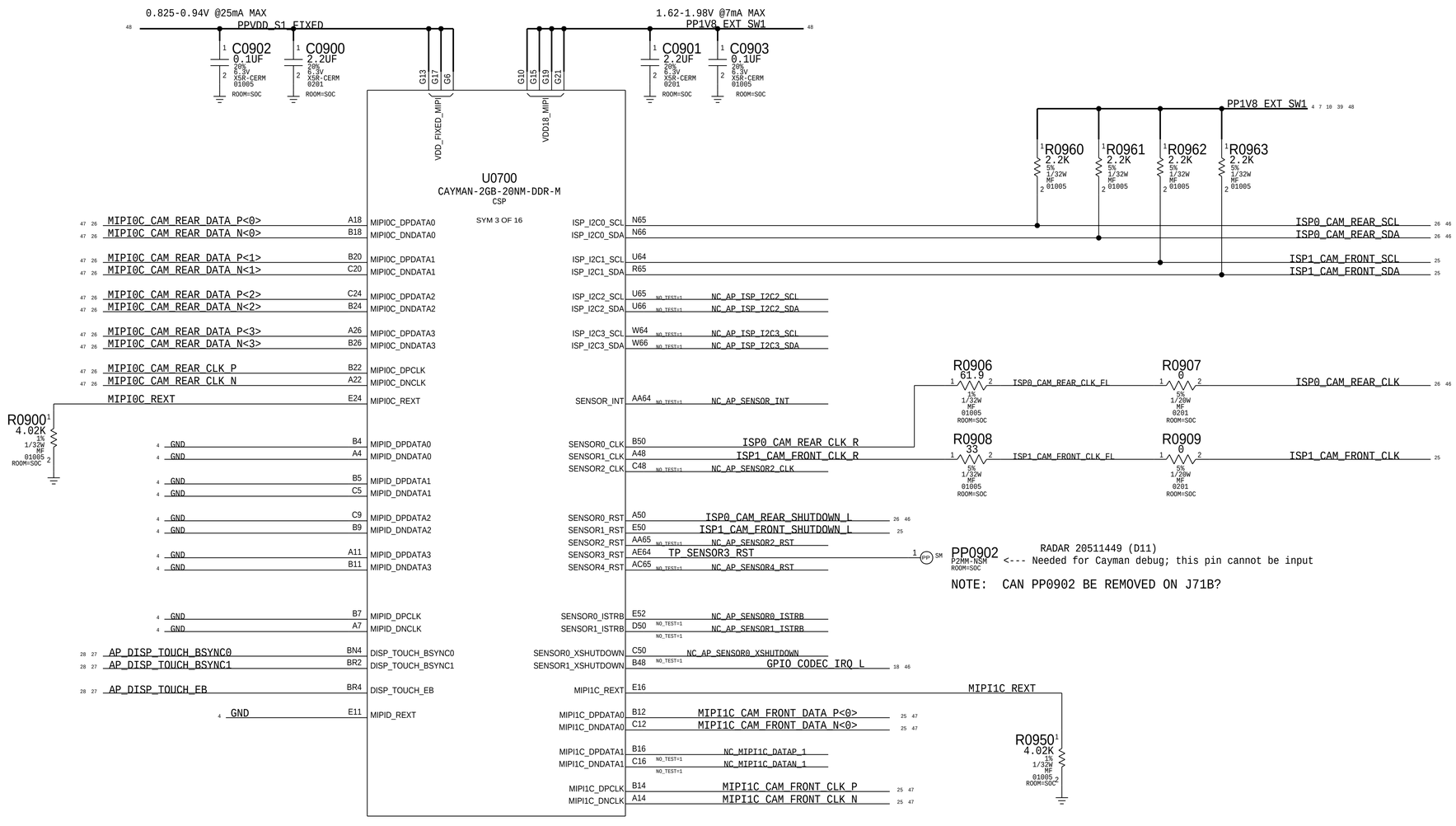

TO BE REVIEWED

PAGE TITLE	SOC:MIPI AND ISP
DRAWING NUMBER	051-04464
SIZE	D
REVISION	4.0.0
BRANCH	
PAGE	9 OF 121
SHEET	8 OF 48

Apple Inc.

NOTICE OF PROPRIETARY PROPERTY:
THE INFORMATION CONTAINED HEREIN IS THE PROPRIETARY PROPERTY OF APPLE INC.
THE POSESSOR AGREES TO THE FOLLOWING:
I TO MAINTAIN THIS DOCUMENT IN CONFIDENCE
II NOT TO REPRODUCE OR COPY IT
III NOT TO REVEAL OR PUBLISH IT IN WHOLE OR PART
IV ALL RIGHTS RESERVED

NOTE: D11 GROUNDED VDD12_LPDP_TX

VDD12_PLL_LPDP:1.14-1.26V @3mA MAX
VDD12_LPDP:1.14-1.26V @60mA MAX

48 PP1V2_SOC

C1013 2.2UF 20% 6.3V X5R-CERM 0201 ROOM=SOC
C1001 2.2UF 20% 6.3V X5R-CERM 0201 ROOM=SOC
C1004 0.1UF 20% 6.3V X5R-CERM 01005 ROOM=SOC
C1005 0.01UF 10% 6.3V X5R 01005 ROOM=SOC
C1002 15PF 5% 16V NP0-C0G 01005-1 ROOM=SOC Desense for Wifi frequencies

G25 G28 G30 G55 G58 G60 G62 G23

VDD12_LPDP_TX VDD12_LPDP_RX VDD12_PLL_LPDP

U0700
CAYMAN-2GB-20NM-DDR-M
CSP
SYM 4 OF 16

A54	LPDPRX_RX_D0_P	B27	LPDP_TX0P	EDP_DATA_P<0> (32 47)
B54	LPDPRX_RX_D0_N	C27	LPDP_TX0N	EDP_DATA_N<0> (32 47)
B56	LPDPRX_RX_D1_P	A29	LPDP_TX1P	EDP_DATA_P<1> (32 47)
C56	LPDPRX_RX_D1_N	B29	LPDP_TX1N	EDP_DATA_N<1> (32 47)
A61	LPDPRX_RX_D2_P	B31	LPDP_TX2P	EDP_DATA_P<2> (32 47)
B61	LPDPRX_RX_D2_N	C31	LPDP_TX2N	EDP_DATA_N<2> (32 47)
B63	LPDPRX_RX_D3_P	A33	LPDP_TX3P	EDP_DATA_P<3> (32 47)
C63	LPDPRX_RX_D3_N	B33	LPDP_TX3N	EDP_DATA_N<3> (32 47)
A64	LPDPRX_RX_D4_P			
B64	LPDPRX_RX_D4_N			
D54	LPDPRX_AUX_D0_P	D33	LPDP_AUX_P	EDP_AUX_P (32)
E56	LPDPRX_AUX_D1_P	E33	LPDP_AUX_N	EDP_AUX_N (32)
D61	LPDPRX_AUX_D2_P			
E63	LPDPRX_AUX_D3_P	E35	LPDP_CAL_DRV_OUT	LPDP_CAL_DRV_OUT
D64	LPDPRX_AUX_D4_P	E31	LPDP_CAL_VSS_EXT	LPDP_CAL_VSS_EXT
B59	LPDPRX_BYP_CLK_P	BN3	EDP_HPD	EDP_HPD (32)
C59	LPDPRX_BYP_CLK_N	AP2	DP_WAKEUP	NC_AP_DP_WAKEUP (NO_TEST=1)
A57	LPDPRX_RCAL_P			
B57	LPDPRX_RCAL_N			
D57	LPDPRX_EXT_C			

NC_AP_LPDPRX_AUX_DP_0 (NO_TEST=1)
NC_AP_LPDPRX_AUX_DP_1 (NO_TEST=1)
NC_AP_LPDPRX_AUX_DP_2 (NO_TEST=1)
NC_AP_LPDPRX_AUX_DP_3 (NO_TEST=1)
NC_AP_LPDPRX_AUX_DP_4 (NO_TEST=1)
NC_AP_LPDPRX_P_RCAL (NO_TEST=1)
NC_AP_LPDPRX_N_RCAL (NO_TEST=1)
NC_AP_LPDPRX_EXT_C (NO_TEST=1)

#24401637:Unconnect LPDPRX_EXT_C

CRITICAL
C1050 20PF 5% 16V C0G 01005

R1050 100 1% 1/32W MF 01005

NOTE: "NC" & GROUNDED PER SANJEEV MAHESHWARI

PAGE TITLE: SOC:LPDP

Apple Inc.

DRAWING NUMBER: 051-04464
SIZE: D
REVISION: 4.0.0
BRANCH:
PAGE: 10 OF 121
SHEET: 9 OF 48

NOTICE OF PROPRIETARY PROPERTY:
THE INFORMATION CONTAINED HEREIN IS THE PROPRIETARY PROPERTY OF APPLE INC.
THE POSESSOR AGREES TO THE FOLLOWING:
I TO MAINTAIN THIS DOCUMENT IN CONFIDENCE
II NOT TO REPRODUCE OR COPY IT
III NOT TO REVEAL OR PUBLISH IT IN WHOLE OR PART
IV ALL RIGHTS RESERVED

SOC - SERIAL INTERFACES

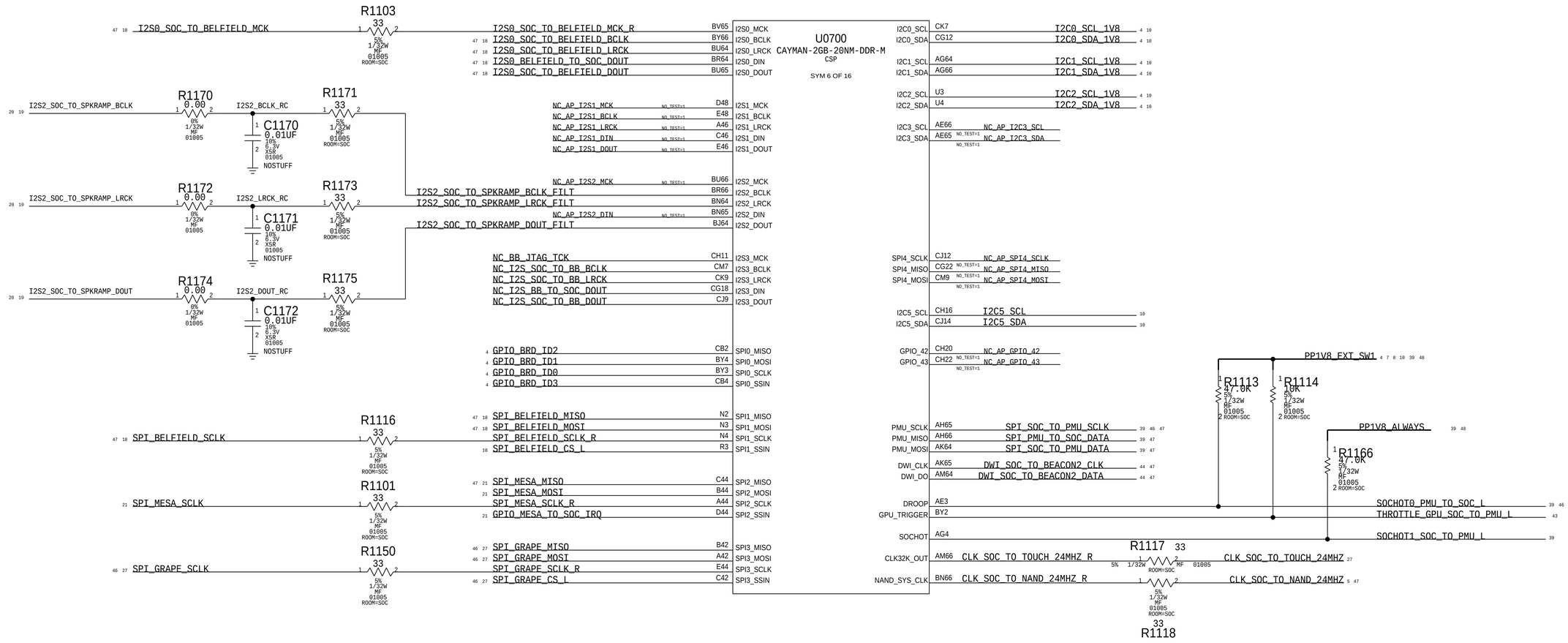

I2C5
See Radar#25316444 for Details

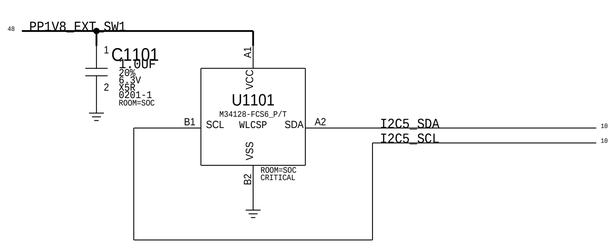

To Cayman

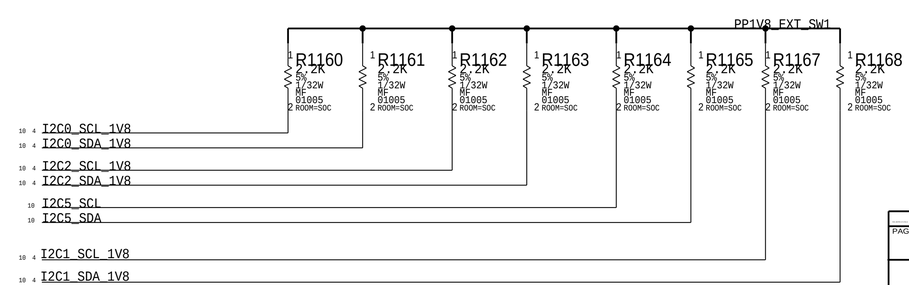

PAGE TITLE
SOC:SERIAL

Apple Inc.

DRAWING NUMBER 051-04464
SIZE D
REVISION 4.0.0
BRANCH
PAGE 11 OF 121
SHEET 10 OF 48

NOTICE OF PROPRIETARY PROPERTY:
THE INFORMATION CONTAINED HEREIN IS THE PROPRIETARY PROPERTY OF APPLE INC.
THE POSESSOR AGREES TO THE FOLLOWING:
I TO MAINTAIN THIS DOCUMENT IN CONFIDENCE
II NOT TO REPRODUCE OR COPY IT
III NOT TO REVEAL OR PUBLISH IT IN WHOLE OR PART
IV ALL RIGHTS RESERVED

SOC - GPIO INTERFACES

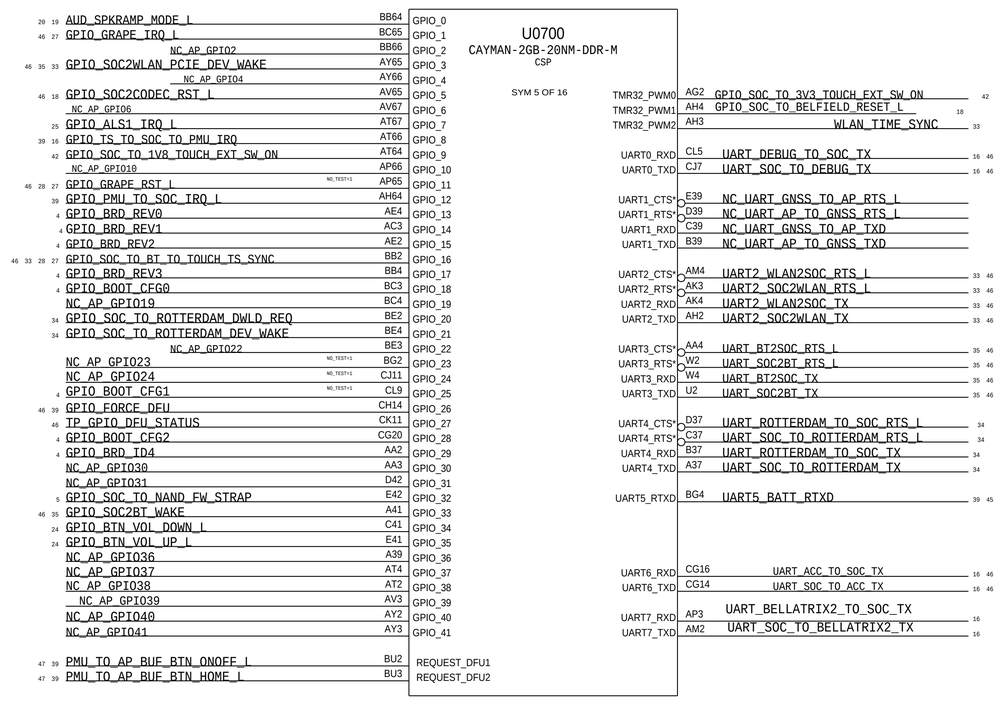

PAGE TITLE

SOC:GPIO & UART

Apple Inc.

DRAWING NUMBER 051-04464

SIZE D

REVISION 4.0.0

BRANCH

PAGE 12 OF 121

SHEET 11 OF 48

NOTICE OF PROPRIETARY PROPERTY:

THE INFORMATION CONTAINED HEREIN IS THE PROPRIETARY PROPERTY OF APPLE INC.
THE POSESSOR AGREES TO THE FOLLOWING:

I TO MAINTAIN THIS DOCUMENT IN CONFIDENCE
II NOT TO REPRODUCE OR COPY IT
III NOT TO REVEAL OR PUBLISH IT IN WHOLE OR PART
IV ALL RIGHTS RESERVED

SOC - AOP

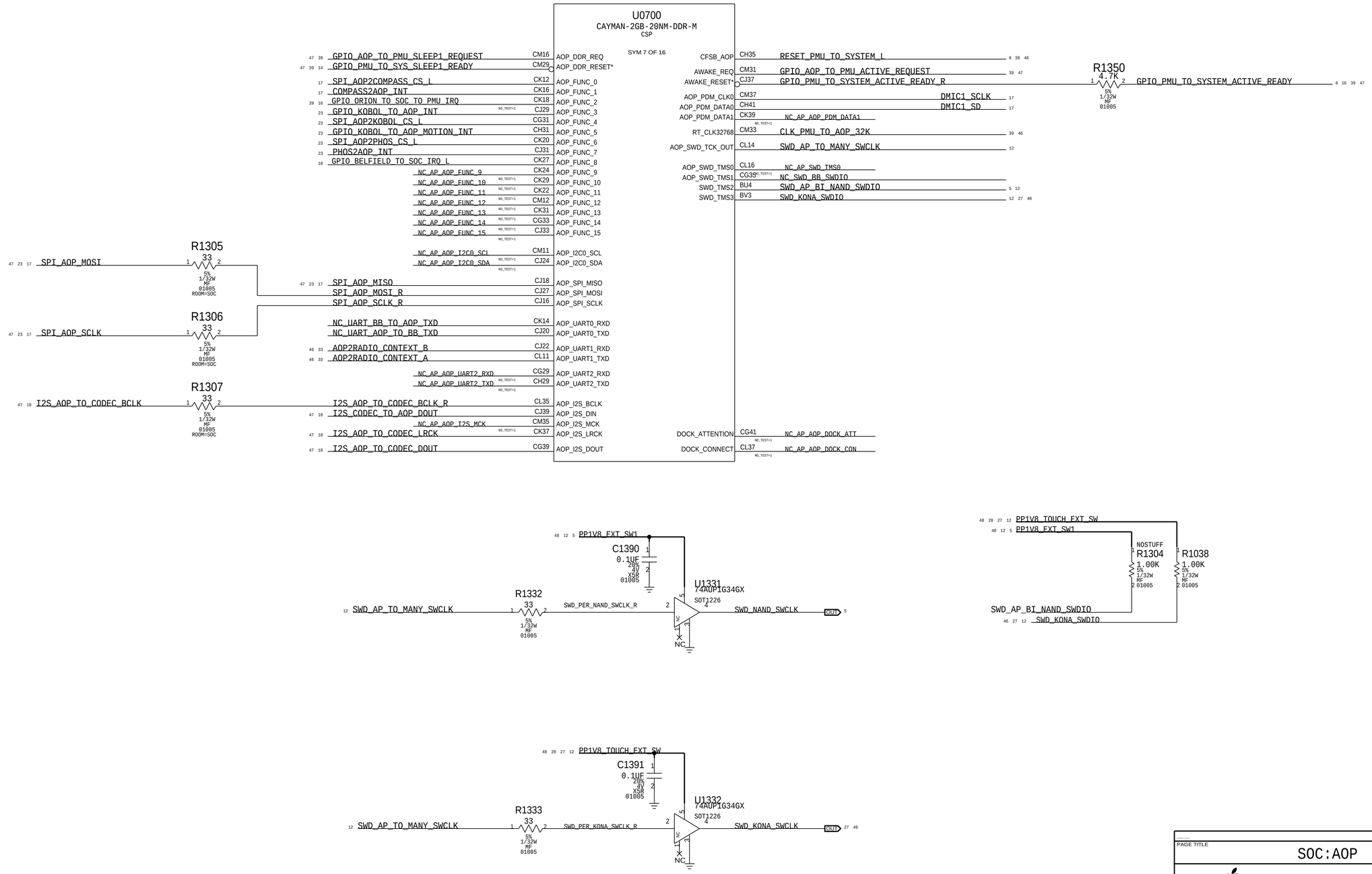

PAGE TITLE
SOC:AOP

Apple Inc.

DRAWING NUMBER 051-04464 SIZE D
REVISION 4.0.0
BRANCH
PAGE 13 OF 121
SHEET 12 OF 48

NOTICE OF PROPRIETARY PROPERTY:
THE INFORMATION CONTAINED HEREIN IS THE PROPRIETARY PROPERTY OF APPLE INC.
THE POSESSOR AGREES TO THE FOLLOWING:
I TO MAINTAIN THIS DOCUMENT IN CONFIDENCE
II NOT TO REPRODUCE OR COPY IT
III NOT TO REVEAL OR PUBLISH IT IN WHOLE OR PART
IV ALL RIGHTS RESERVED

SOC - CPU, GPU & SOC RAILS

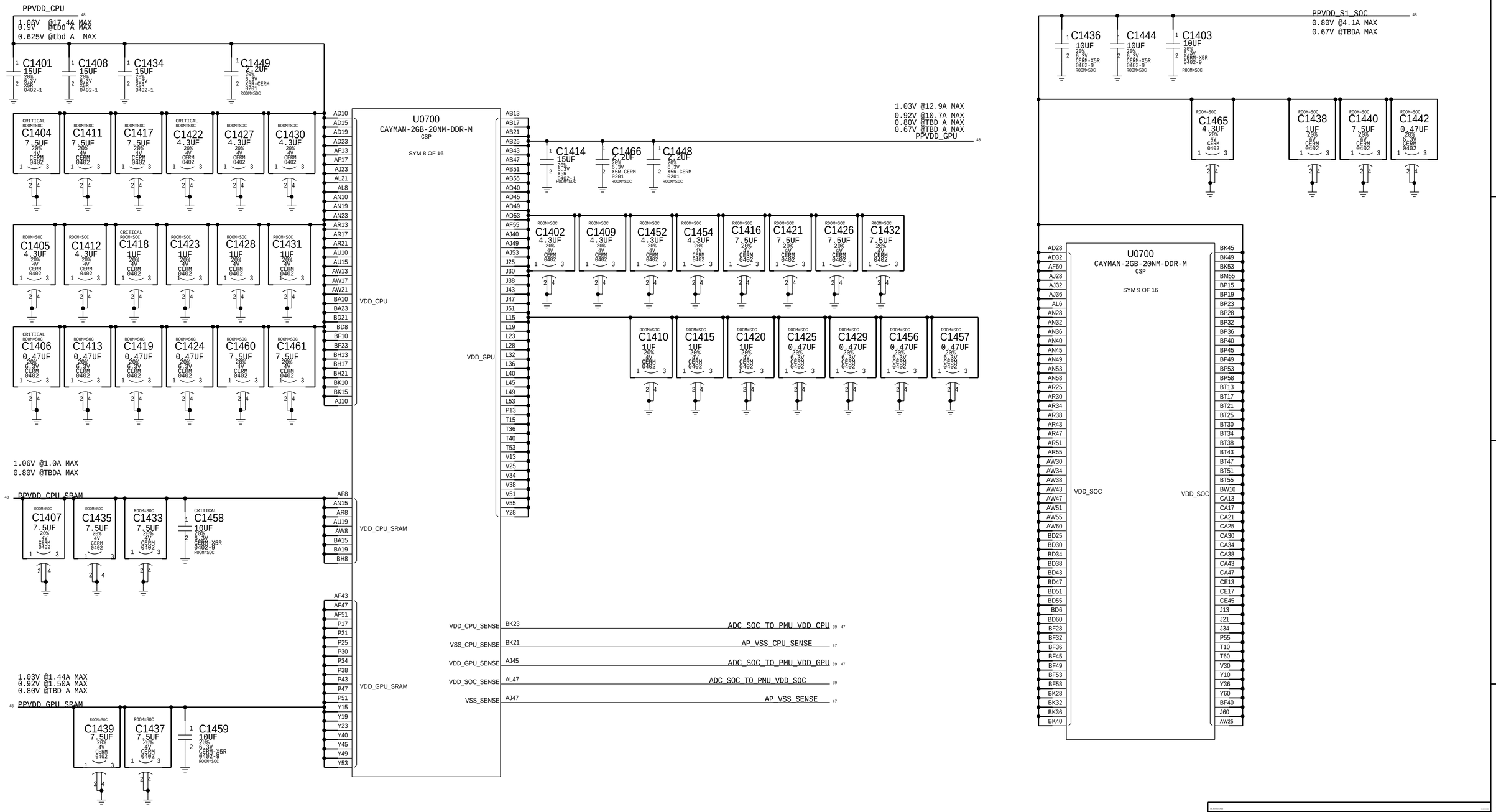

PAGE TITLE
SOC:POWER (1/3)

Apple Inc.

DRAWING NUMBER 051-04464 SIZE D
REVISION 4.0.0
BRANCH
PAGE 14 OF 121
SHEET 13 OF 48

NOTICE OF PROPRIETARY PROPERTY:
THE INFORMATION CONTAINED HEREIN IS THE PROPRIETARY PROPERTY OF APPLE INC.
THE POSESSOR AGREES TO THE FOLLOWING:
I TO MAINTAIN THIS DOCUMENT IN CONFIDENCE
II NOT TO REPRODUCE OR COPY IT
III NOT TO REVEAL OR PUBLISH IT IN WHOLE OR PART
IV ALL RIGHTS RESERVED

SOC - POWER SUPPLIES

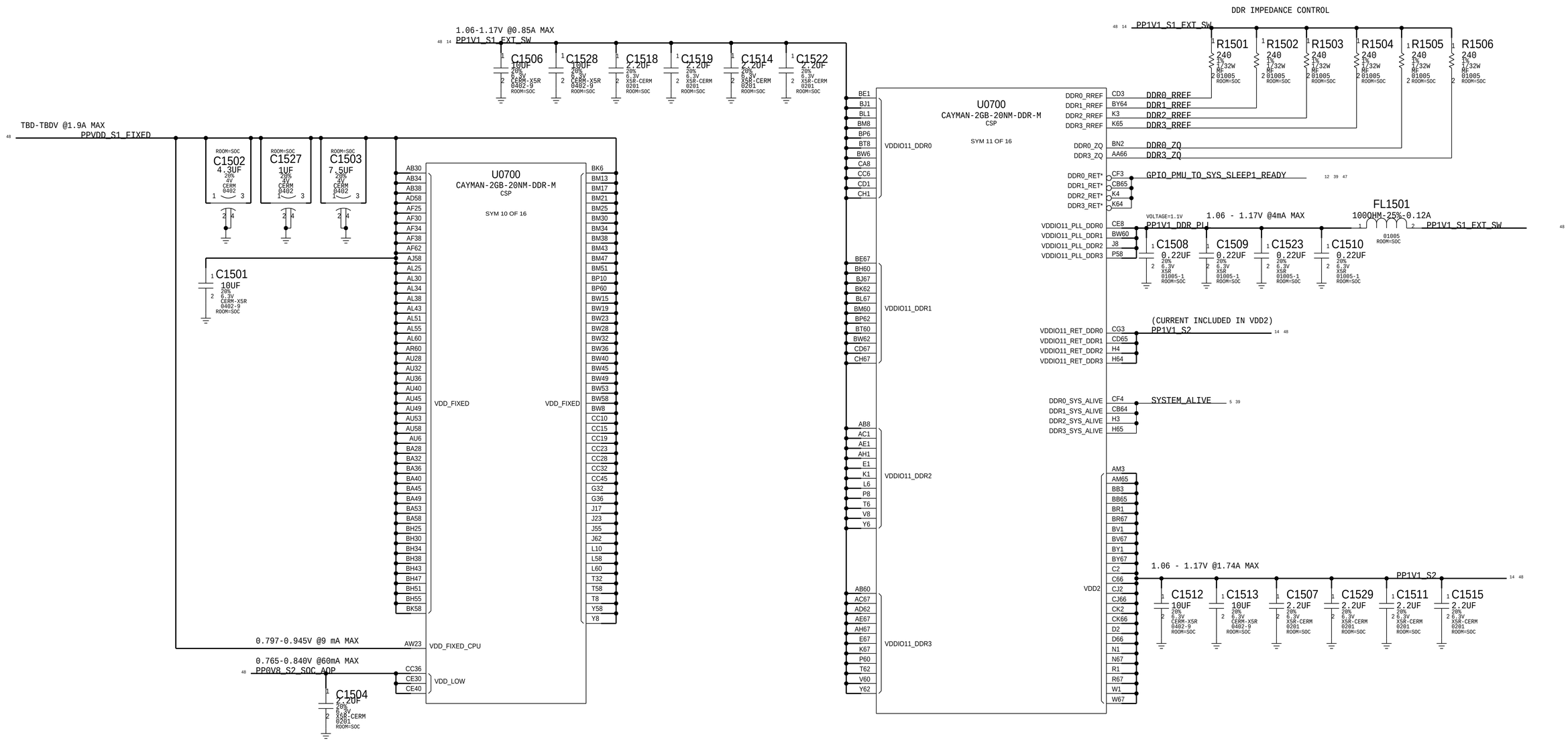

PAGE TITLE
SOC:POWER (2/3)

Apple Inc.

DRAWING NUMBER 051-04464
SIZE D
REVISION 4.0.0
BRANCH
PAGE 15 OF 121
SHEET 14 OF 48

NOTICE OF PROPRIETARY PROPERTY:
THE INFORMATION CONTAINED HEREIN IS THE PROPRIETARY PROPERTY OF APPLE INC.
THE POSESSOR AGREES TO THE FOLLOWING:
I TO MAINTAIN THIS DOCUMENT IN CONFIDENCE
II NOT TO REPRODUCE OR COPY IT
III NOT TO REVEAL OR PUBLISH IT IN WHOLE OR PART
IV ALL RIGHTS RESERVED

SOC - POWER SUPPLIES

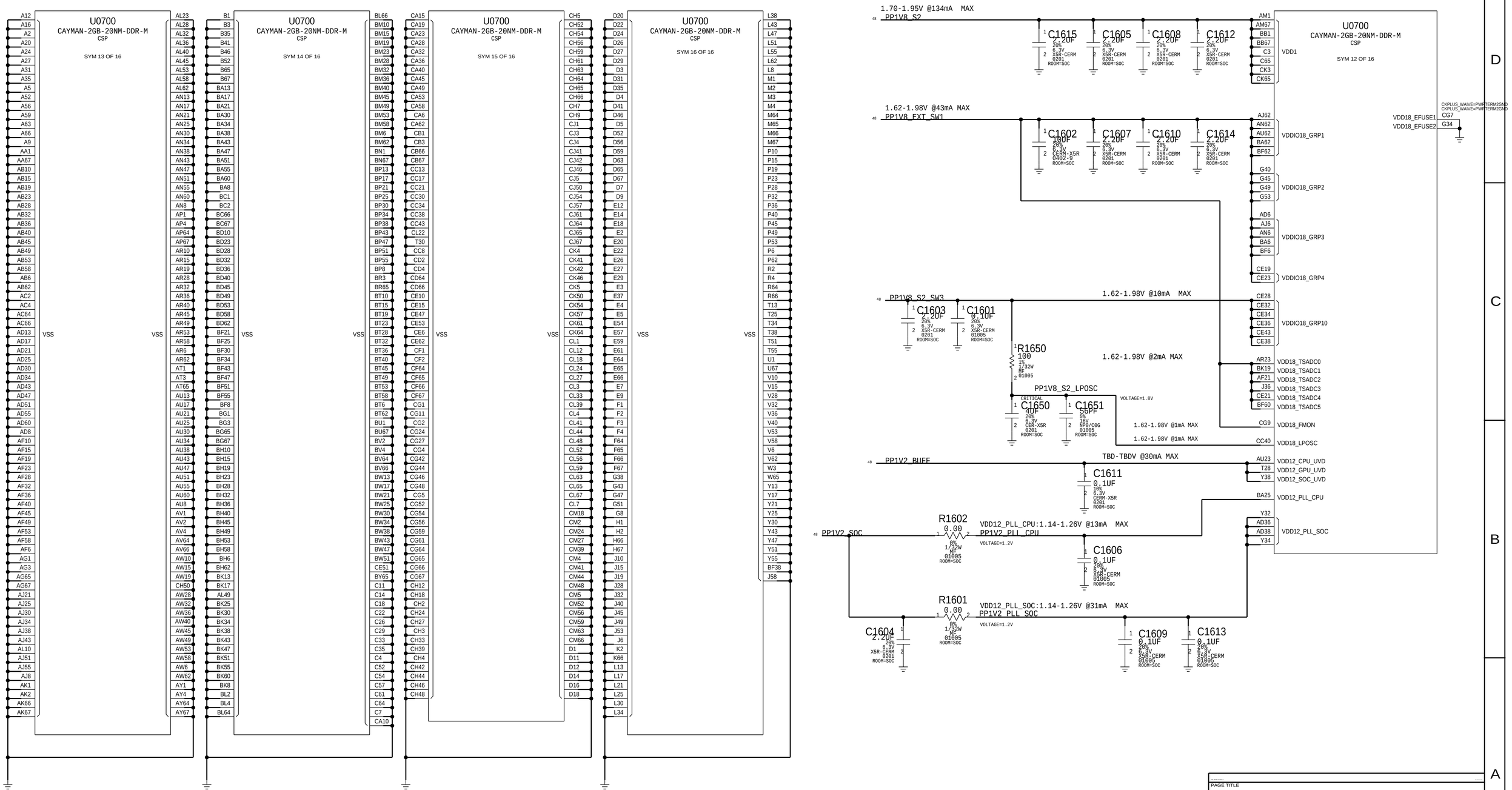

PAGE TITLE

SOC:POWER (3/3)

Apple Inc.

DRAWING NUMBER 051-04464 SIZE D

REVISION 4.0.0

BRANCH

PAGE 16 OF 121

SHEET 15 OF 48

NOTICE OF PROPRIETARY PROPERTY:

THE INFORMATION CONTAINED HEREIN IS THE PROPRIETARY PROPERTY OF APPLE INC.
THE POSESSOR AGREES TO THE FOLLOWING:
I TO MAINTAIN THIS DOCUMENT IN CONFIDENCE
II NOT TO REPRODUCE OR COPY IT
III NOT TO REVEAL OR PUBLISH IT IN WHOLE OR PART
IV ALL RIGHTS RESERVED

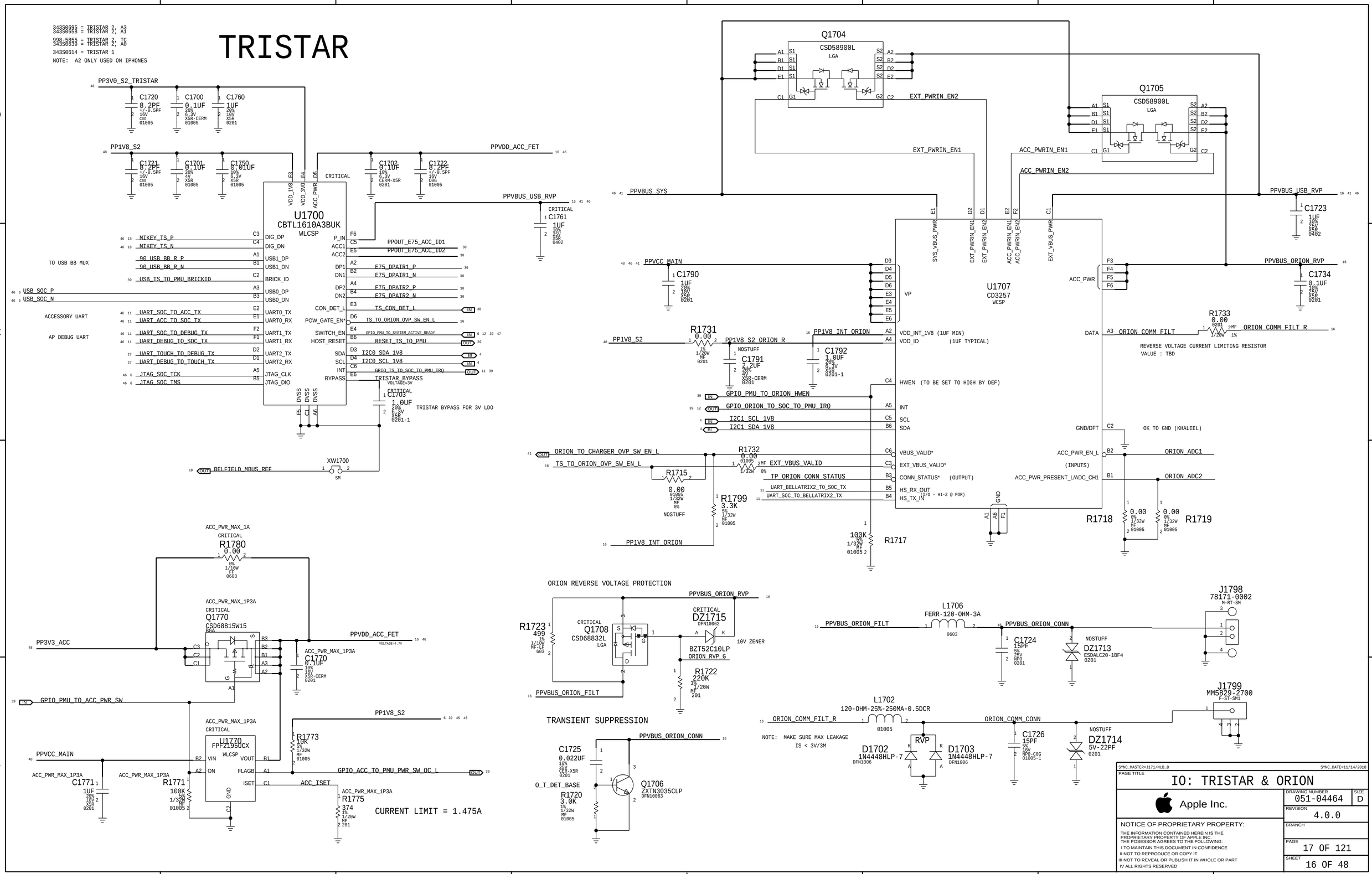
TRISTAR
343S0605 = TRISTAR 2, A3
343S0658 = TRISTAR 2, A1
998-5855 = TRISTAR 2, TC
343S0639 = TRISTAR 2, A0
343S0614 = TRISTAR 1
NOTE: A2 ONLY USED ON IPHONES
PP3V0_S2_TRISTAR
C1720 8.2PF +/-0.5PF 16V C0G 01005
C1700 0.1UF 20% 6.3V X5R-CERM 01005
C1760 1UF 20% 10V X5R 0201
PP1V8_S2
C1721 8.2PF +/-0.5PF 16V C0G 01005
C1701 0.1UF 20% 4V X5R 01005
C1750 0.01UF 10% 6.3V X5R 01005
PPVDD_ACC_FET
C1702 0.1UF 10% 6.3V CERM-X5R 0201
C1722 8.2PF +/-0.5PF 16V C0G 01005
PPVBUS_USB_RVP
C1761 1UF 10% 25V X5R 0402
U1700
CBTL1610A3BUK
WLCSP
VDD_1V8
VDD_3V0
ACC_PWR
CRITICAL
DIG_DP
DIG_DN
USB1_DP
USB1_DN
BRICK_ID
USB0_DP
USB0_DN
UART0_TX
UART0_RX
UART1_TX
UART1_RX
UART2_TX
UART2_RX
JTAG_CLK
JTAG_DIO
P_IN
ACC1
ACC2
DP1
DN1
DP2
DN2
CON_DET_L
POW_GATE_EN*
SWITCH_EN
HOST_RESET
SDA
SCL
INT
BYPASS
DVSS
MIKEY_TS_P
MIKEY_TS_N
TO USB BB MUX
90_USB_BB_R_P
90_USB_BB_R_N
USB_TS_TO_PMU_BRICKID
USB_SOC_P
USB_SOC_N
ACCESSORY UART
UART_SOC_TO_ACC_TX
UART_ACC_TO_SOC_TX
AP DEBUG UART
UART_SOC_TO_DEBUG_TX
UART_DEBUG_TO_SOC_TX
UART_TOUCH_TO_DEBUG_TX
UART_DEBUG_TO_TOUCH_TX
JTAG_SOC_TCK
JTAG_SOC_TMS
PPOUT_E75_ACC_ID1
PPOUT_E75_ACC_ID2
E75_DPAIR1_P
E75_DPAIR1_N
E75_DPAIR2_P
E75_DPAIR2_N
TS_CON_DET_L
TS_TO_ORION_OVP_SW_EN_L
GPIO_PMU_TO_SYSTEM_ACTIVE_READY
RESET_TS_TO_PMU
I2C0_SDA_1V8
I2C0_SCL_1V8
GPIO_TS_TO_SOC_TO_PMU_IRQ
TRISTAR_BYPASS
VOLTAGE=3V
C1703 1.0UF 20% 6.3V X5R 0201-1
TRISTAR BYPASS FOR 3V LDO
XW1700
SM
BELFIELD_MBUS_REF
Q1704
CSD58900L
LGA
EXT_PWRIN_EN2
EXT_PWRIN_EN1
Q1705
CSD58900L
LGA
ACC_PWRIN_EN1
ACC_PWRIN_EN2
PPVBUS_SYS
PPVCC_MAIN
C1790 1UF 20% 10V X5R 0201
U1707
CD3257
WCSP
SYS_VBUS_PWR
EXT_PWRIN_EN1
EXT_PWRIN_EN2
ACC_PWRIN_EN1
ACC_PWRIN_EN2
EXT_VBUS_PWR
VP
C1723 1UF 10% 25V X5R 0402
PPVBUS_ORION_RVP
C1734 0.1UF 10% 25V X5R 0201
ACC_PWR
R1733 0.00 0201 1/20W MF 1%
ORION_COMM_FILT
ORION_COMM_FILT_R
REVERSE VOLTAGE CURRENT LIMITING RESISTOR
VALUE : TBD
R1731 0.00 1% 1/20W MF 0201
PP1V8_S2
PP1V8_S2_ORION_R
NOSTUFF
C1791 2.2UF 20% 4V X5R-CERM 0201
PP1V8_INT_ORION
C1792 1.0UF 20% 6.3V X5R 0201-1
VDD_INT_1V8 (1UF MIN)
VDD_IO (1UF TYPICAL)
HWEN (TO BE SET TO HIGH BY DEF)
GPIO_PMU_TO_ORION_HWEN
GPIO_ORION_TO_SOC_TO_PMU_IRQ
I2C1_SCL_1V8
I2C1_SDA_1V8
INT
SCL
SDA
VBUS_VALID*
EXT_VBUS_VALID*
CONN_STATUS* (OUTPUT)
HS_RX_OUT
HS_TX_IN
(I/O - HI-Z @ POR)
ORION_TO_CHARGER_OVP_SW_EN_L
TS_TO_ORION_OVP_SW_EN_L
R1732 0.00 01005 1/32W MF 0%
EXT_VBUS_VALID
R1715 0.00 01005 1/32W MF 0% NOSTUFF
TP_ORION_CONN_STATUS
UART_BELLATRIX2_TO_SOC_TX
UART_SOC_TO_BELLATRIX2_TX
R1799 3.3K 5% 1/32W MF 01005
PP1V8_INT_ORION
R1717 100K 5% 1/32W MF 01005
GND
DATA
ORION_COMM_FILT
GND/DFT
OK TO GND (KHALEEL)
ACC_PWR_EN_L
(INPUTS)
ACC_PWR_PRESENT_L/ADC_CH1
ORION_ADC1
ORION_ADC2
R1718 0.00 0% 1/32W MF 01005
R1719 0.00 0% 1/32W MF 01005
ACC_PWR_MAX_1A
CRITICAL
R1780 0.00 0% 1/10W FF 0603
ACC_PWR_MAX_1P3A
CRITICAL
Q1770
CSD68815W15
BGA
PP3V3_ACC
PPVDD_ACC_FET
VOLTAGE=4.7V
C1770 0.1UF 10% 16V X5R-CERM 0201
GPIO_PMU_TO_ACC_PWR_SW
U1770
FPF21950CX
WLCSP
VIN
ON
VOUT
FLAGB
ISET
GND
PP1V8_S2
R1773 10K 1% 1/32W MF 01005
PPVCC_MAIN
GPIO_ACC_TO_PMU_PWR_SW_OC_L
ACC_ISET
C1771 1UF 20% 16V X5R 0201
R1771 100K 5% 1/32W MF 01005
R1775 374 1% 1/20W MF 201
CURRENT LIMIT = 1.475A
ORION REVERSE VOLTAGE PROTECTION
R1723 499 1% 1/10W MF-LF 603
CRITICAL
Q1708
CSD68832L
LGA
PPVBUS_ORION_RVP
DZ1715
DFN10062
10V ZENER
BZT52C10LP
ORION_RVP_G
R1722 220K 1% 1/20W MF 201
PPVBUS_ORION_FILT
TRANSIENT SUPPRESSION
PPVBUS_ORION_CONN
C1725 0.022UF 10% 25V CER-X5R 0201
O_T_DET_BASE
R1720 3.0K 1% 1/32W MF 01005
Q1706
ZXTN3035CLP
DFN10063
L1706
FERR-120-OHM-3A
0603
PPVBUS_ORION_FILT
PPVBUS_ORION_CONN
C1724 15PF 5% 25V NPO 0201
NOSTUFF
DZ1713
ESDALC20-1BF4
0201
J1798
78171-0002
M-RT-SM
L1702
120-OHM-25%-250MA-0.5DCR
01005
ORION_COMM_FILT_R
ORION_COMM_CONN
NOTE: MAKE SURE MAX LEAKAGE IS < 3V/3M
RVP
D1702
1N4448HLP-7
DFN1006
D1703
1N4448HLP-7
DFN1006
C1726 15PF 5% 16V NP0-C0G 01005-1
NOSTUFF
DZ1714
5V-22PF
0201
J1799
MM5829-2700
F-ST-SM1
SYNC_MASTER=J171/MLB_B
SYNC_DATE=11/14/2018
PAGE TITLE
IO: TRISTAR & ORION
Apple Inc.
DRAWING NUMBER 051-04464
SIZE D
REVISION 4.0.0
BRANCH
PAGE 17 OF 121
SHEET 16 OF 48
NOTICE OF PROPRIETARY PROPERTY:
THE INFORMATION CONTAINED HEREIN IS THE PROPRIETARY PROPERTY OF APPLE INC.
THE POSESSOR AGREES TO THE FOLLOWING:
I TO MAINTAIN THIS DOCUMENT IN CONFIDENCE
II NOT TO REPRODUCE OR COPY IT
III NOT TO REVEAL OR PUBLISH IT IN WHOLE OR PART
IV ALL RIGHTS RESERVED

HP JACK B2B CONNECTOR

J1800 MATCHES J171/FLEX_AJ_CELL_WIFI_0.1.0 29 AUG 2018
MLB: 516S1084
FLEX: 516S1085

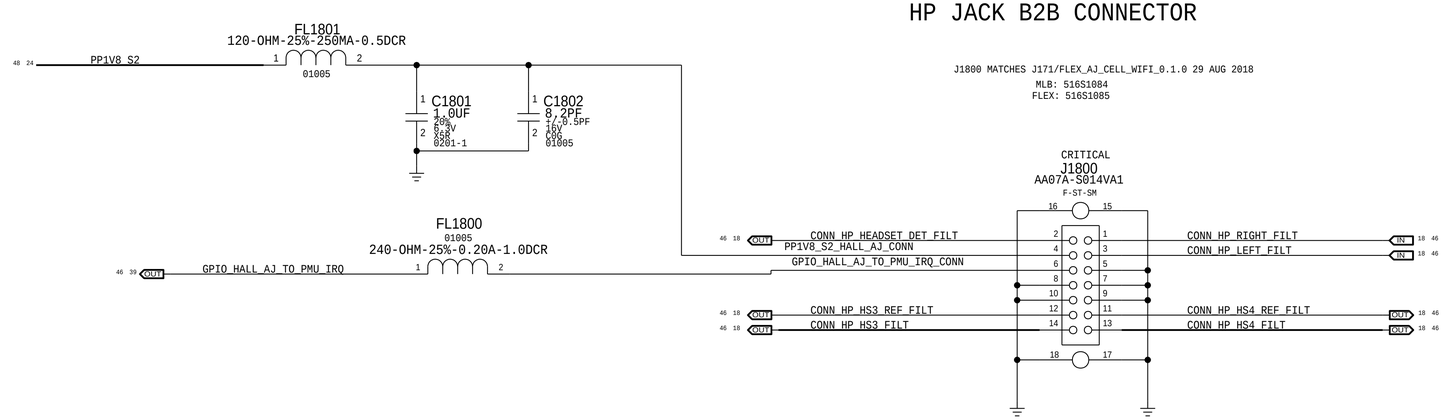

DMIC FILTERS

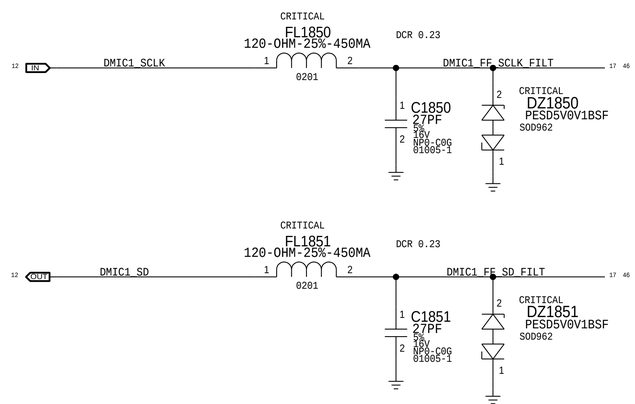

MICROPHONE / COMPASS FLEX B2B CONNECTOR

MLB APN: 516S1084
FLEX APN: 516S1085

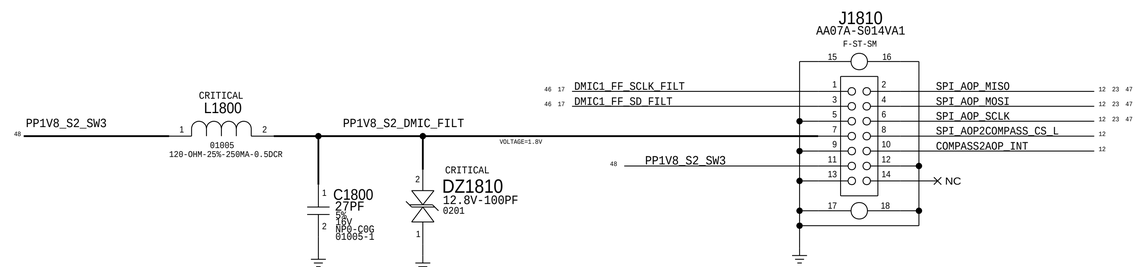

PART NUMBER	ALTERNATE FOR PART NUMBER	BOM OPTION	REF DES	COMMENTS:
377S0077	377S0111			

DZ1850,DZ1851

SYNC_MASTER=J171/MLB_B SYNC_DATE=10/24/2018

PAGE TITLE
AUDIO: HP/DMIC FLEX CONNS

Apple Inc.

DRAWING NUMBER 051-04464 SIZE D
REVISION 4.0.0
BRANCH
PAGE 18 OF 121
SHEET 17 OF 48

NOTICE OF PROPRIETARY PROPERTY:
THE INFORMATION CONTAINED HEREIN IS THE PROPRIETARY PROPERTY OF APPLE INC.
THE POSESSOR AGREES TO THE FOLLOWING:
I TO MAINTAIN THIS DOCUMENT IN CONFIDENCE
II NOT TO REPRODUCE OR COPY IT
III NOT TO REVEAL OR PUBLISH IT IN WHOLE OR PART
IV ALL RIGHTS RESERVED

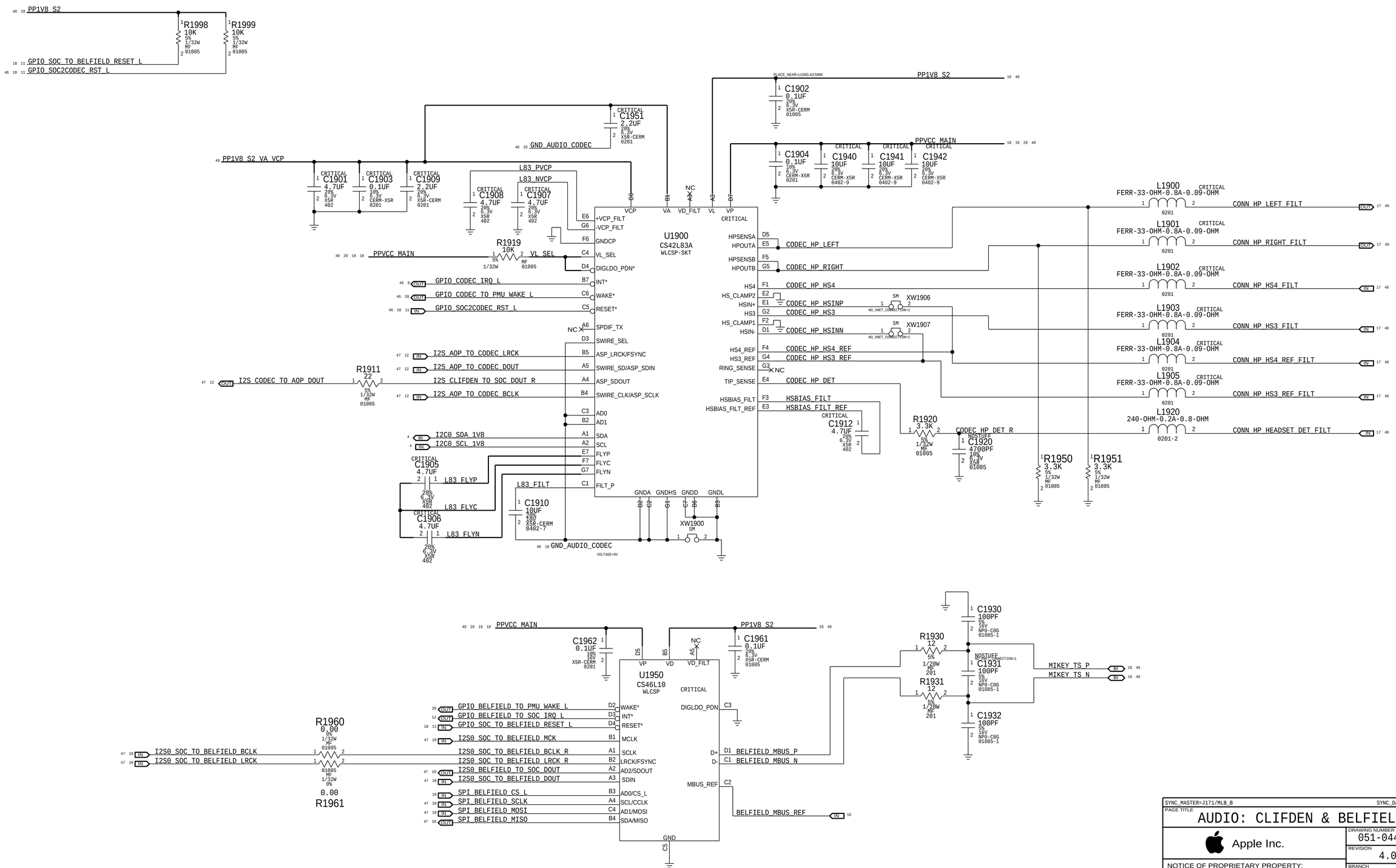

SYNC_MASTER=J171/MLB_B SYNC_DATE=10/24/2018

PAGE TITLE

AUDIO: CLIFDEN & BELFIELD

Apple Inc.

DRAWING NUMBER	051-04464
SIZE	D
REVISION	4.0.0
BRANCH	
PAGE	19 OF 121
SHEET	18 OF 48

NOTICE OF PROPRIETARY PROPERTY:

THE INFORMATION CONTAINED HEREIN IS THE PROPRIETARY PROPERTY OF APPLE INC. THE POSESSOR AGREES TO THE FOLLOWING:

I TO MAINTAIN THIS DOCUMENT IN CONFIDENCE

II NOT TO REPRODUCE OR COPY IT

III NOT TO REVEAL OR PUBLISH IT IN WHOLE OR PART

IV ALL RIGHTS RESERVED

SPEAKER AMPLIFIERS

APN:353S4265

TDM CHANNEL 1

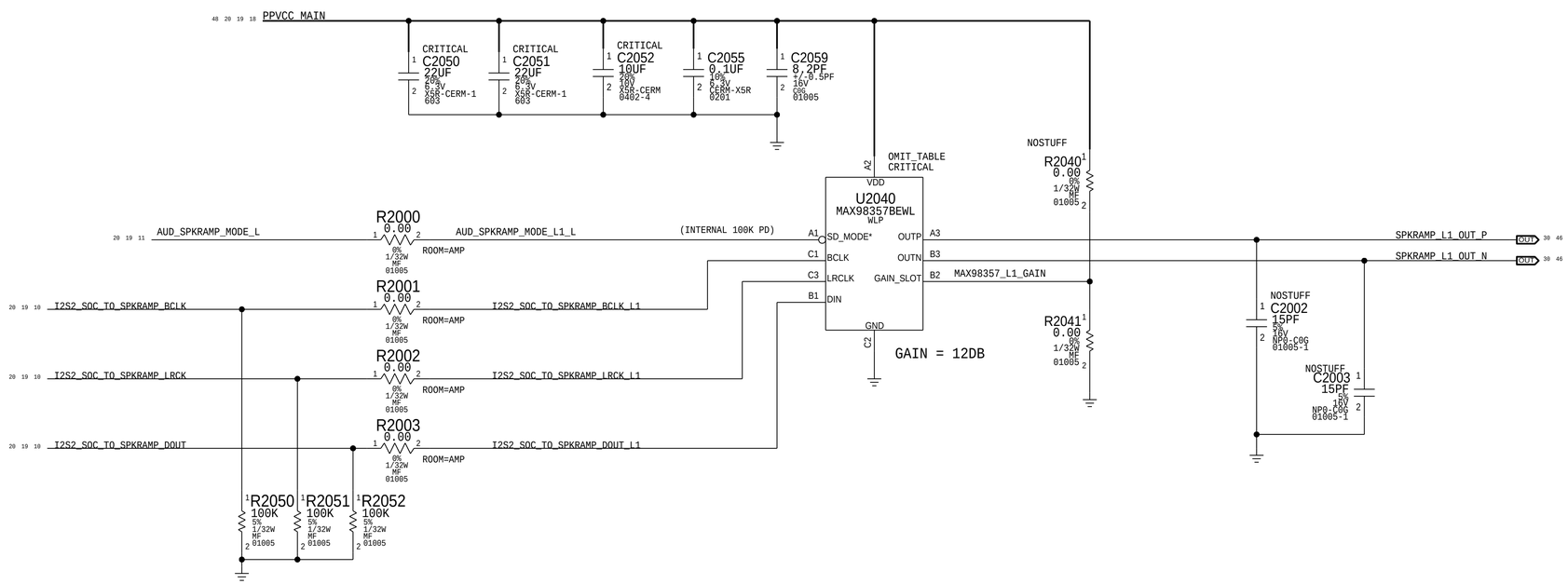

SD_MODE#	TDM CHANNEL	GAIN_SLOT
H	1	PULLED TO GND
H	2	PULLED WITH 0-OHM TO VDD
H	3	FLOAT
H	4	PULLED WITH 100K-OHM TO VDD

TDM CHANNEL 2

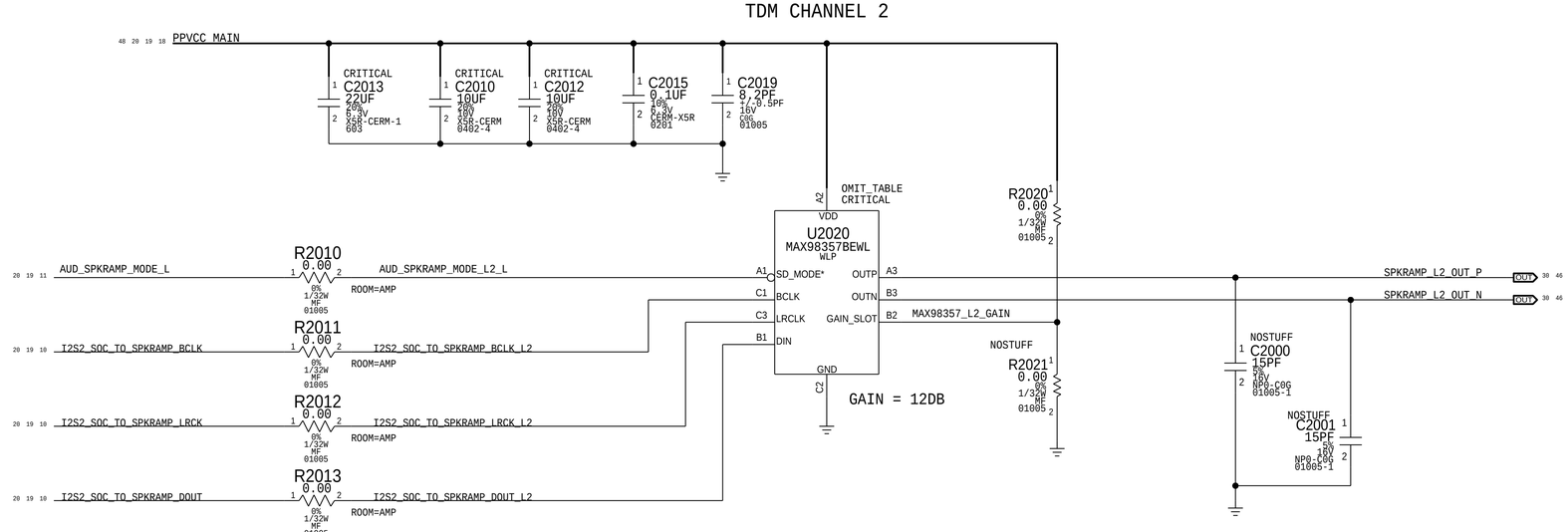

SYNC_MASTER=J171/MLB_B SYNC_DATE=10/24/2018

PAGE TITLE
AUDIO: SPEAKER AMPS LEFT

Apple Inc.

DRAWING NUMBER 051-04464 SIZE D

REVISION 4.0.0

BRANCH

PAGE 20 OF 121

SHEET 19 OF 48

NOTICE OF PROPRIETARY PROPERTY:

THE INFORMATION CONTAINED HEREIN IS THE PROPRIETARY PROPERTY OF APPLE INC.
THE POSESSOR AGREES TO THE FOLLOWING:
I TO MAINTAIN THIS DOCUMENT IN CONFIDENCE
II NOT TO REPRODUCE OR COPY IT
III NOT TO REVEAL OR PUBLISH IT IN WHOLE OR PART
IV ALL RIGHTS RESERVED

SPEAKER AMPLIFIERS

APN:353S4265

TDM CHANNEL 3

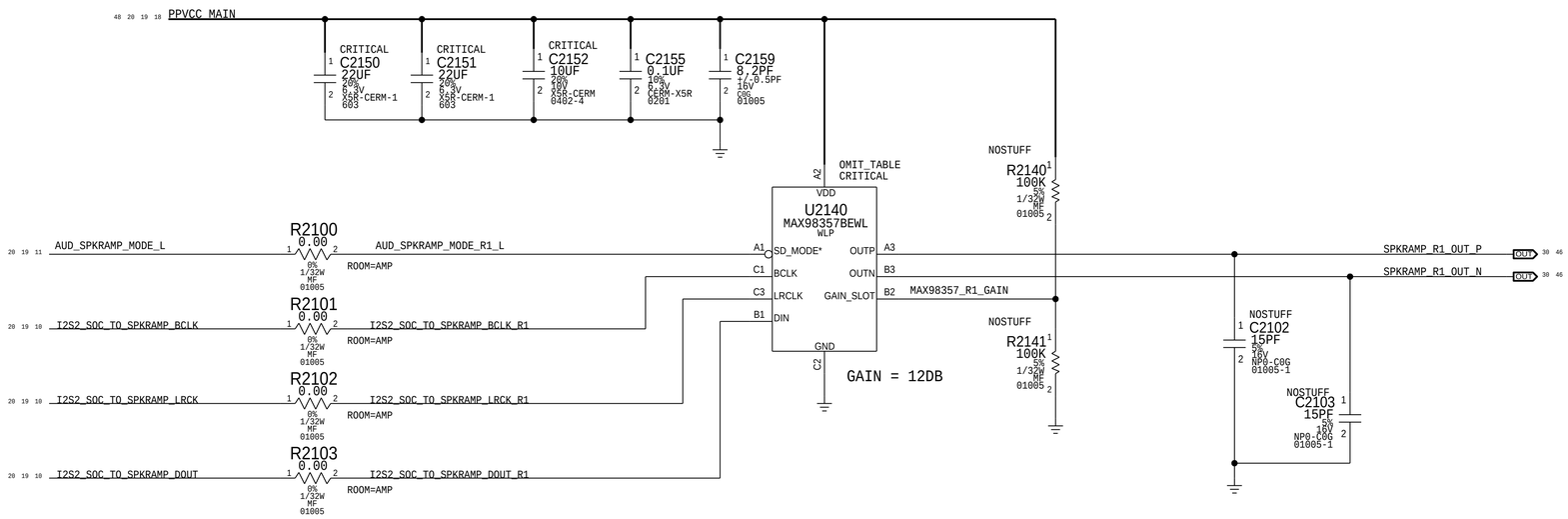

SD_MODE#	TDM CHANNEL	GAIN_SLOT
H	1	PULLED TO GND
H	2	PULLED WITH 0-OHM TO VDD
H	3	FLOAT
H	4	PULLED WITH 100K-OHM TO VDD

TDM CHANNEL 4

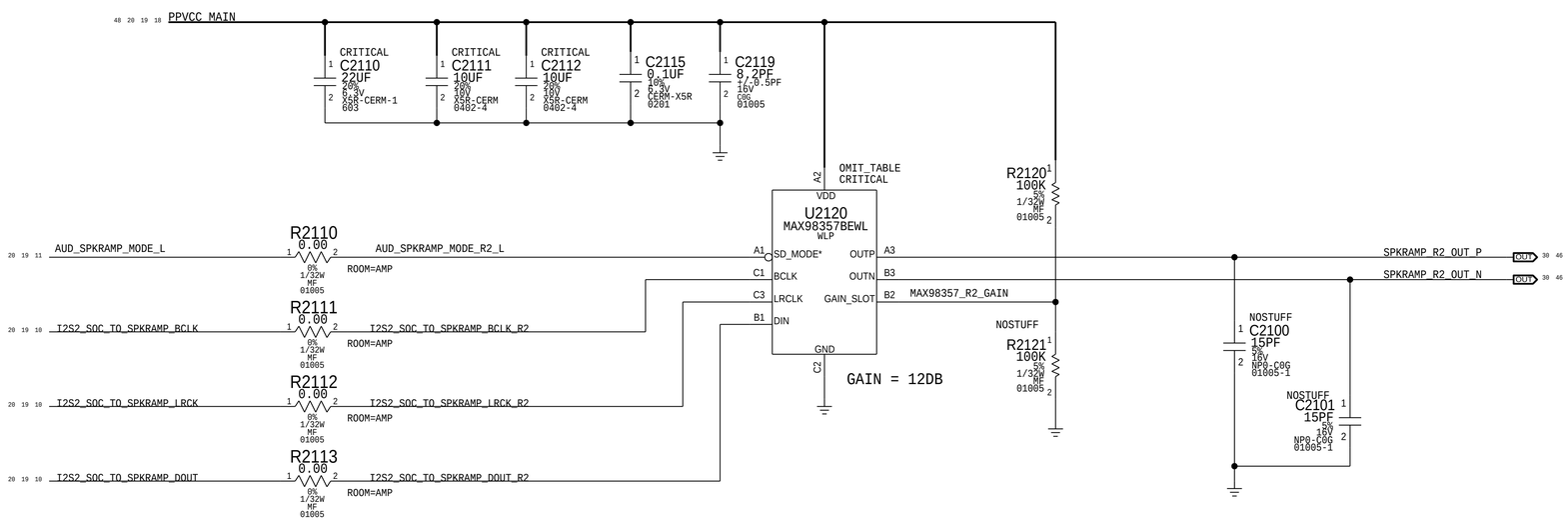

SYNC_MASTER=J171/MLB_B SYNC_DATE=10/24/2018

PAGE TITLE
AUDIO: SPEAKER AMPS RIGHT

Apple Inc.

DRAWING NUMBER 051-04464 SIZE D

REVISION 4.0.0

BRANCH

PAGE 21 OF 121

SHEET 20 OF 48

NOTICE OF PROPRIETARY PROPERTY:

THE INFORMATION CONTAINED HEREIN IS THE PROPRIETARY PROPERTY OF APPLE INC.
THE POSESSOR AGREES TO THE FOLLOWING:

I TO MAINTAIN THIS DOCUMENT IN CONFIDENCE

II NOT TO REPRODUCE OR COPY IT

III NOT TO REVEAL OR PUBLISH IT IN WHOLE OR PART

IV ALL RIGHTS RESERVED

MESA SUPPORT

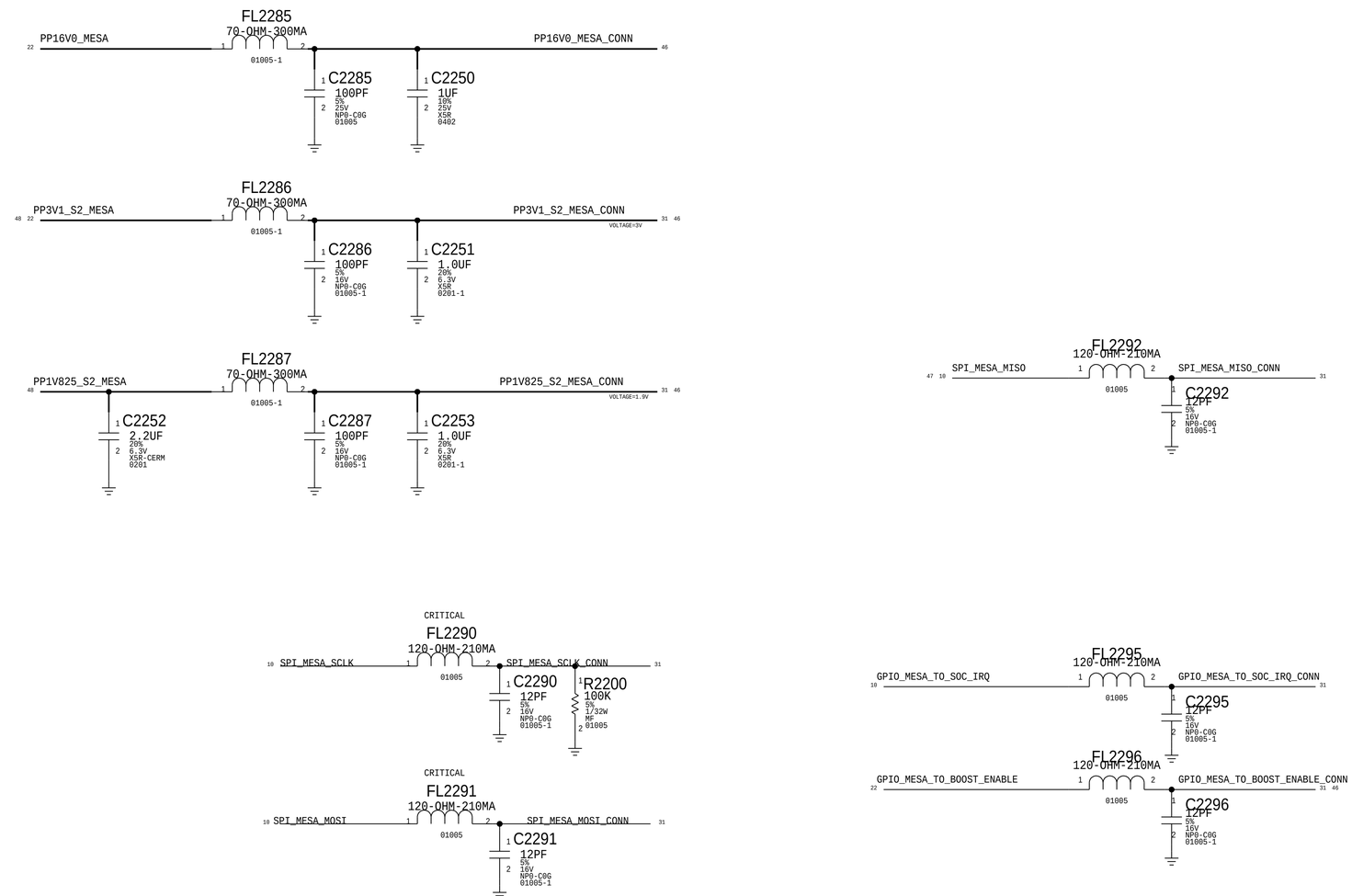

SYNC_MASTER=J171/MLB_B SYNC_DATE=10/24/2018

PAGE TITLE
SENSOR: MESA SUPPORT

Apple Inc.

DRAWING NUMBER 051-04464 SIZE D

REVISION 4.0.0

BRANCH

PAGE 22 OF 121

SHEET 21 OF 48

NOTICE OF PROPRIETARY PROPERTY:
THE INFORMATION CONTAINED HEREIN IS THE PROPRIETARY PROPERTY OF APPLE INC.
THE POSESSOR AGREES TO THE FOLLOWING:
I TO MAINTAIN THIS DOCUMENT IN CONFIDENCE
II NOT TO REPRODUCE OR COPY IT
III NOT TO REVEAL OR PUBLISH IT IN WHOLE OR PART
IV ALL RIGHTS RESERVED

MOJAVE (BOOST)

PART#	QTY	DESCRIPTION	REFERENCE DESIGNATOR(S)	CRITICAL	BOM OPTION
353S4207	1	IC,MOJAVE,LM3638,A1,CSP9	U2300	CRITICAL	

APN: 353S4207 (A1 MOJAVE POR FOR J171/J172)
VENDOR: TI

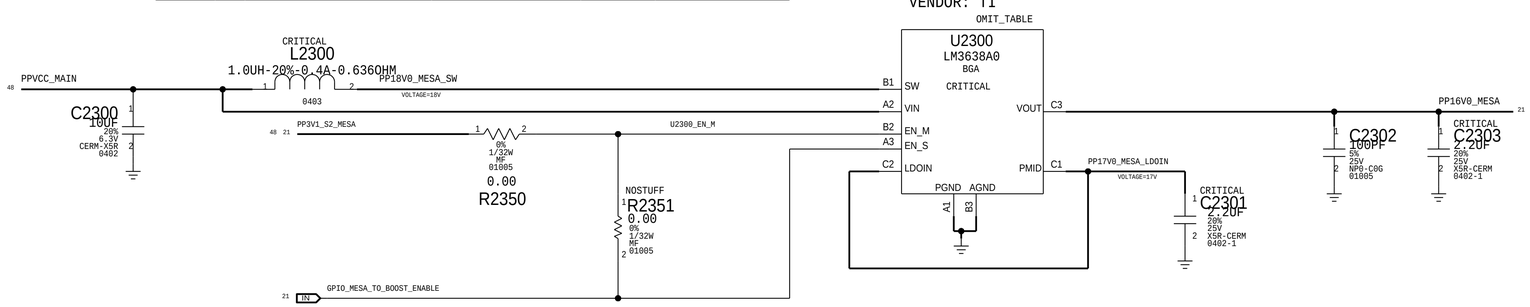

SYNC_MASTER=J71B_MLB_B1 SYNC_DATE=07/23/2018

PAGE TITLE
SENSOR: MESA BOOST

Apple Inc.

DRAWING NUMBER 051-04464 SIZE D
REVISION 4.0.0
BRANCH
PAGE 23 OF 121
SHEET 22 OF 48

NOTICE OF PROPRIETARY PROPERTY:
THE INFORMATION CONTAINED HEREIN IS THE PROPRIETARY PROPERTY OF APPLE INC.
THE POSESSOR AGREES TO THE FOLLOWING:
I TO MAINTAIN THIS DOCUMENT IN CONFIDENCE
II NOT TO REPRODUCE OR COPY IT
III NOT TO REVEAL OR PUBLISH IT IN WHOLE OR PART
IV ALL RIGHTS RESERVED

PHOSPHORUS

APN 338S00334

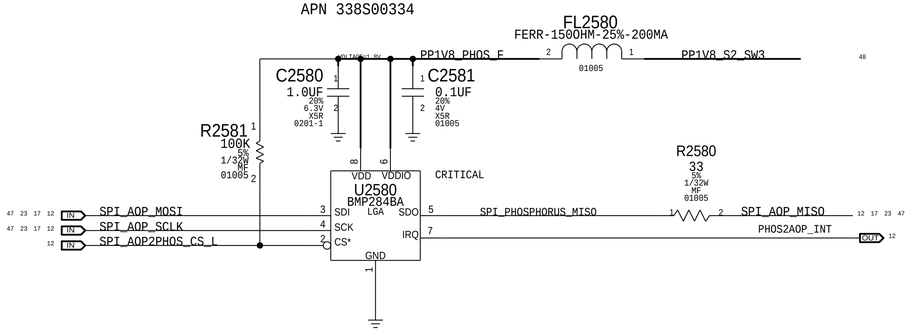

KOBOL - ACCEL & GYRO

APN: 338S00367

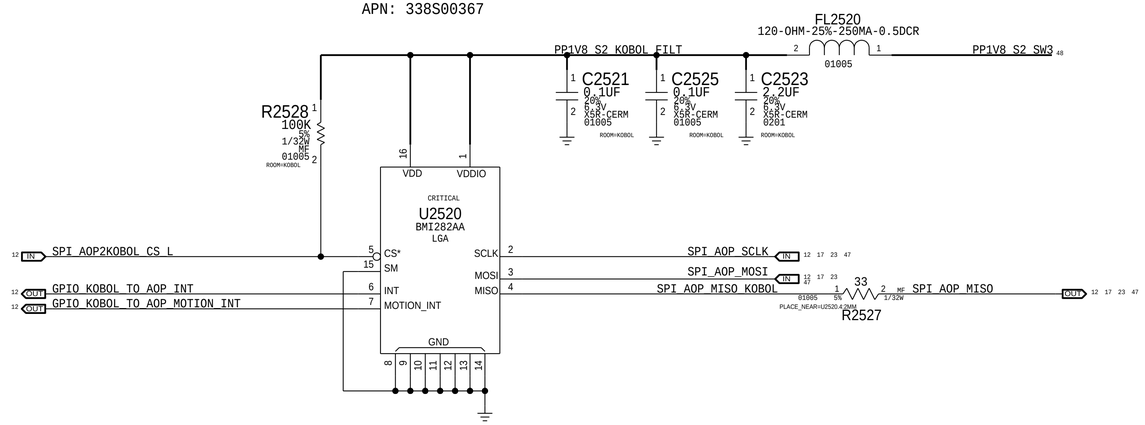

SYNC_MASTER=J171/MLB_B	SYNC_DATE=10/24/2018
PAGE TITLE	SENSOR: KOBOL, PHOS
Apple Inc.	DRAWING NUMBER 051-04464 — SIZE D
	REVISION 4.0.0
NOTICE OF PROPRIETARY PROPERTY: THE INFORMATION CONTAINED HEREIN IS THE PROPRIETARY PROPERTY OF APPLE INC. THE POSESSOR AGREES TO THE FOLLOWING: I TO MAINTAIN THIS DOCUMENT IN CONFIDENCE II NOT TO REPRODUCE OR COPY IT III NOT TO REVEAL OR PUBLISH IT IN WHOLE OR PART IV ALL RIGHTS RESERVED	BRANCH
	PAGE 25 OF 121
	SHEET 23 OF 48

BUTTON CONNECTOR

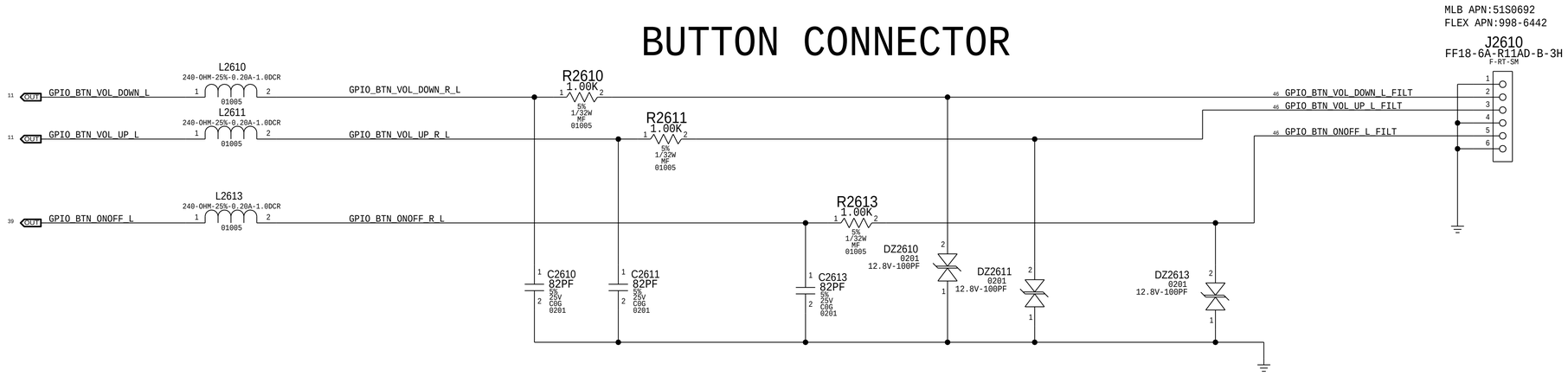

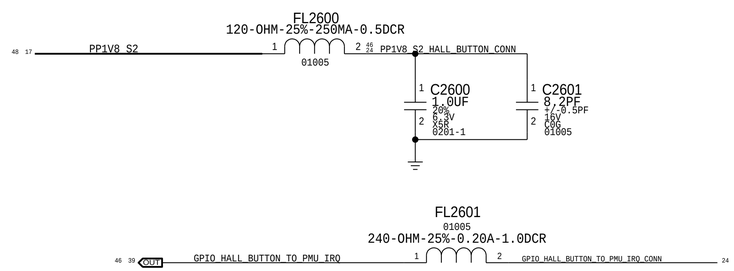

HES STANDALONE FLEX CONN

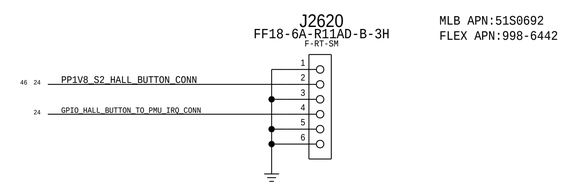

SYNC_MASTER=J171/MLB_B SYNC_DATE=10/24/2018

PAGE TITLE
IO: BUTTON FLEX CONN / HES

Apple Inc.

DRAWING NUMBER 051-04464 SIZE D

REVISION 4.0.0

BRANCH

PAGE 26 OF 121

SHEET 24 OF 48

NOTICE OF PROPRIETARY PROPERTY:
THE INFORMATION CONTAINED HEREIN IS THE PROPRIETARY PROPERTY OF APPLE INC.
THE POSESSOR AGREES TO THE FOLLOWING:
I TO MAINTAIN THIS DOCUMENT IN CONFIDENCE
II NOT TO REPRODUCE OR COPY IT
III NOT TO REVEAL OR PUBLISH IT IN WHOLE OR PART
IV ALL RIGHTS RESERVED

FRONT CAMERA CONNECTOR

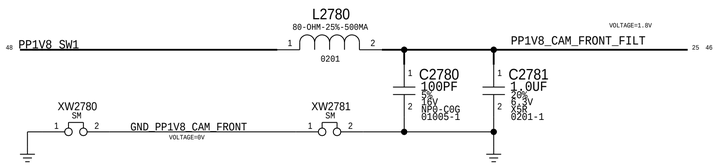

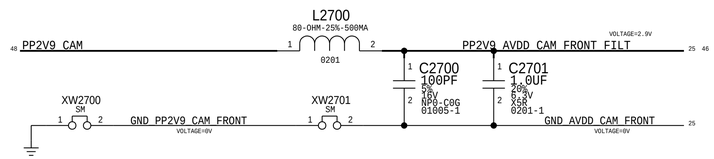

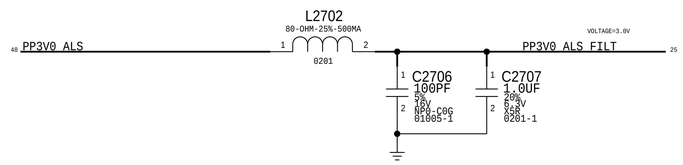

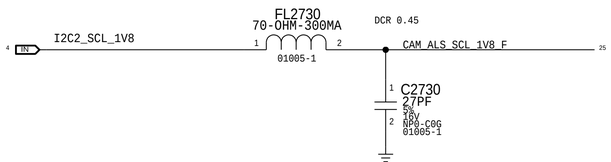

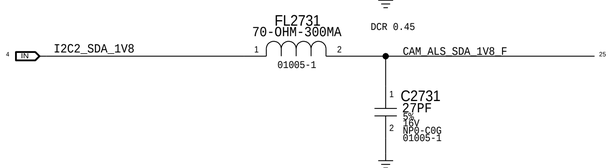

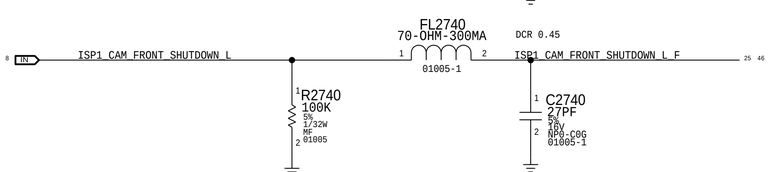

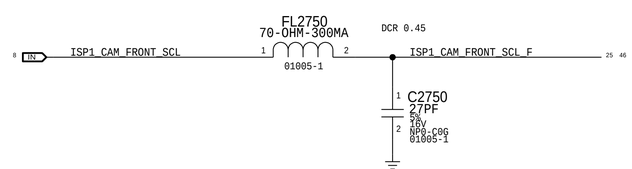

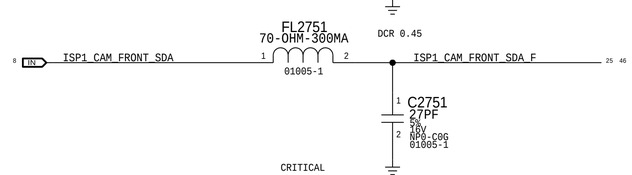

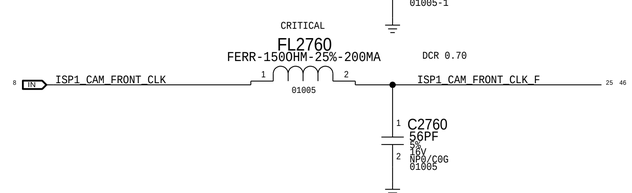

J65 CAMERA CONNECTOR

APN:MLB 516S0876

APN:FLEX 516S0869

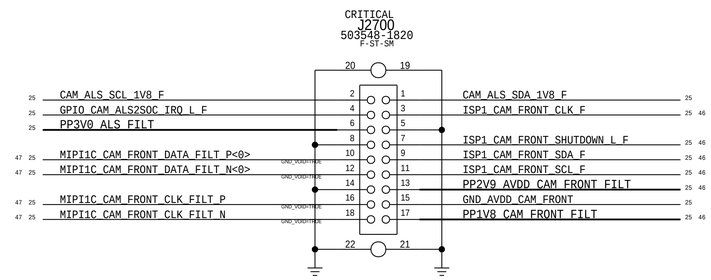

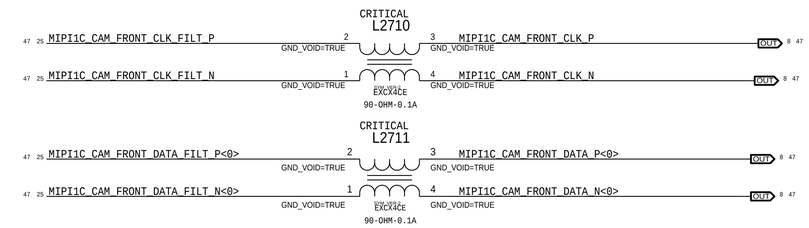

SYNC_MASTER=J171/MLB_B SYNC_DATE=10/24/2018

PAGE TITLE

CAMERA: FF AND ALS CONN

Apple Inc.

DRAWING NUMBER 051-04464

SIZE D

REVISION 4.0.0

BRANCH

PAGE 27 OF 121

SHEET 25 OF 48

NOTICE OF PROPRIETARY PROPERTY:

THE INFORMATION CONTAINED HEREIN IS THE PROPRIETARY PROPERTY OF APPLE INC.
THE POSESSOR AGREES TO THE FOLLOWING:
I TO MAINTAIN THIS DOCUMENT IN CONFIDENCE
II NOT TO REPRODUCE OR COPY IT
III NOT TO REVEAL OR PUBLISH IT IN WHOLE OR PART
IV ALL RIGHTS RESERVED

REAR CAMERA CONNECTOR

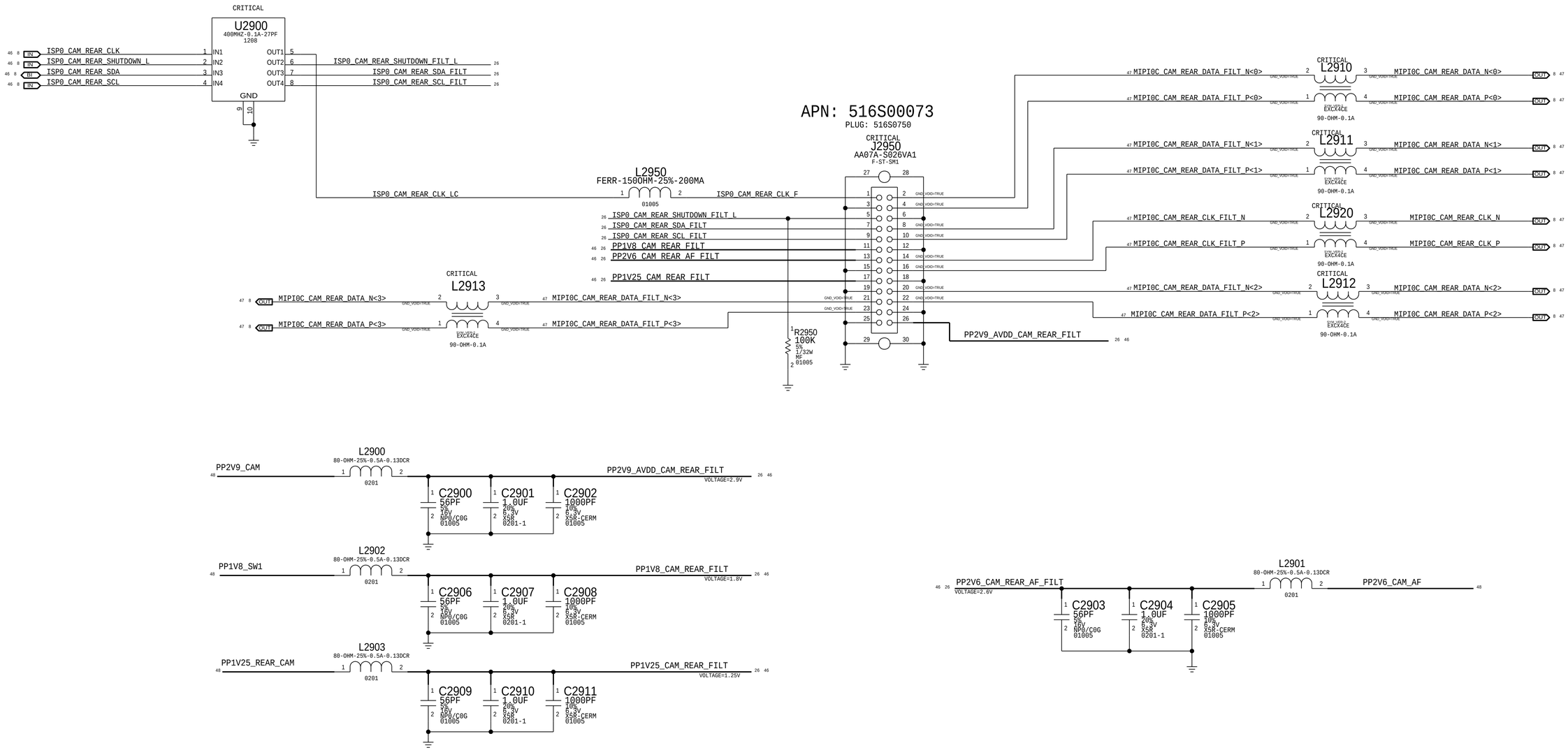

SYNC_MASTER=J171/MLB_B SYNC_DATE=10/24/2018

PAGE TITLE

CAMERA: REAR CONN & FILTERS

Apple Inc.

DRAWING NUMBER 051-04464 SIZE D

REVISION 4.0.0

BRANCH

PAGE 29 OF 121

SHEET 26 OF 48

NOTICE OF PROPRIETARY PROPERTY:

THE INFORMATION CONTAINED HEREIN IS THE PROPRIETARY PROPERTY OF APPLE INC.
THE POSESSOR AGREES TO THE FOLLOWING:

I TO MAINTAIN THIS DOCUMENT IN CONFIDENCE

II NOT TO REPRODUCE OR COPY IT

III NOT TO REVEAL OR PUBLISH IT IN WHOLE OR PART

IV ALL RIGHTS RESERVED

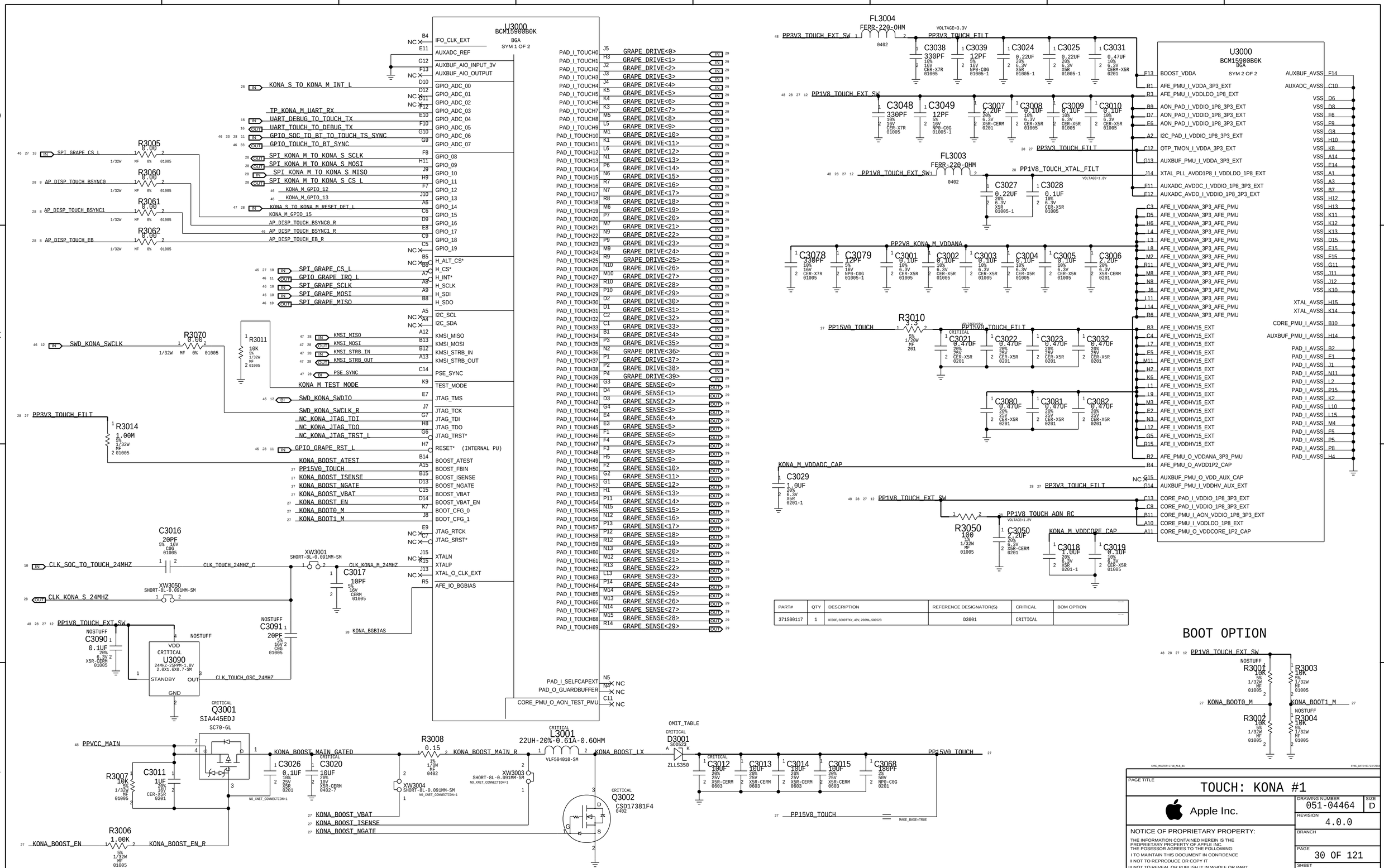

PART#	QTY	DESCRIPTION	REFERENCE DESIGNATOR(S)	CRITICAL	BOM OPTION
371S00117	1	DIODE,SCHOTTKY,40V,200MA,SOD523	D3001	CRITICAL	

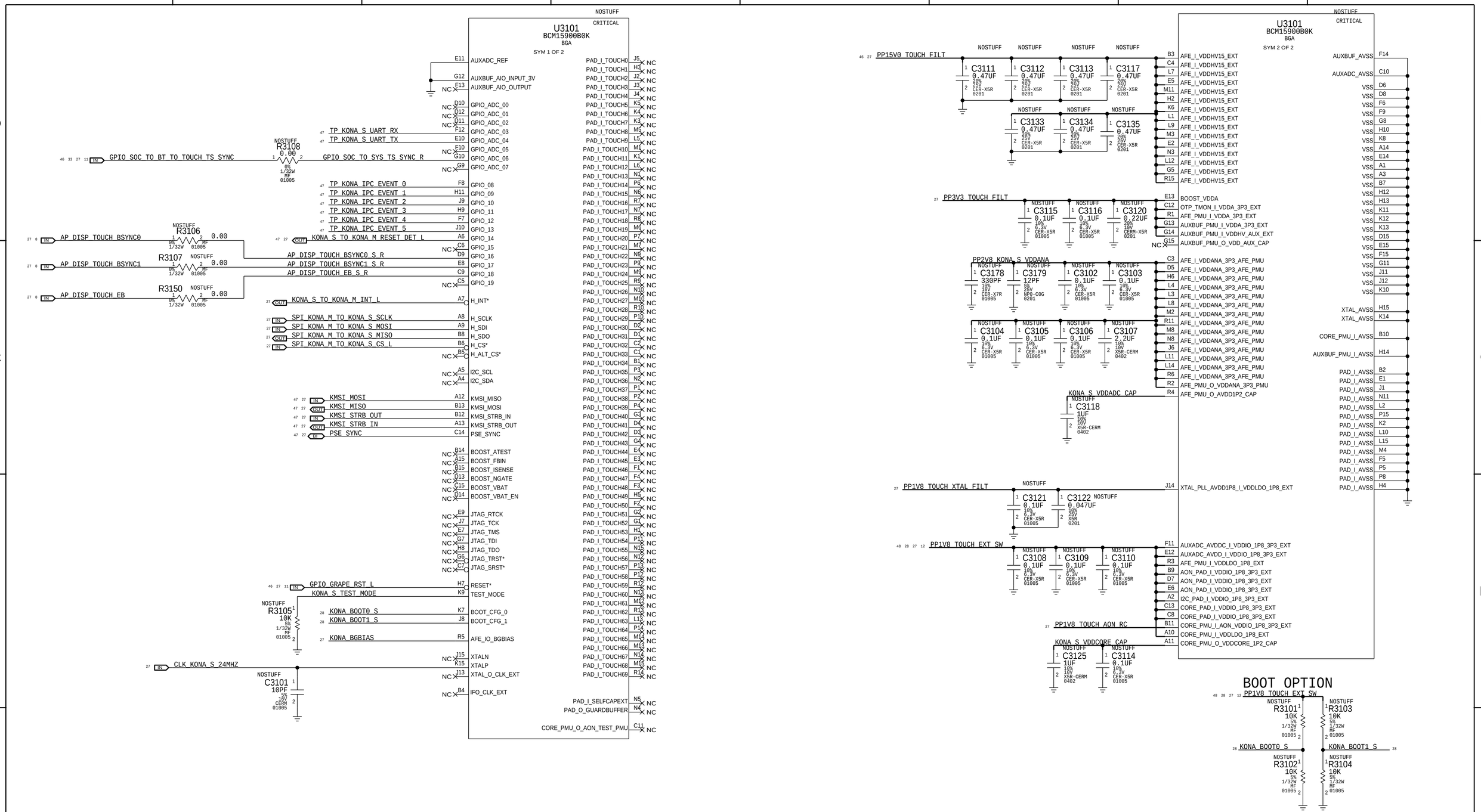

SYNC_MASTER=J171/MLB_B SYNC_DATE=10/24/2018

PAGE TITLE

TOUCH: KONA #2

Apple Inc.

DRAWING NUMBER 051-04464 SIZE D

REVISION 4.0.0

BRANCH

PAGE 31 OF 121

SHEET 28 OF 48

NOTICE OF PROPRIETARY PROPERTY:

THE INFORMATION CONTAINED HEREIN IS THE PROPRIETARY PROPERTY OF APPLE INC. THE POSESSOR AGREES TO THE FOLLOWING:

I TO MAINTAIN THIS DOCUMENT IN CONFIDENCE

II NOT TO REPRODUCE OR COPY IT

III NOT TO REVEAL OR PUBLISH IT IN WHOLE OR PART

IV ALL RIGHTS RESERVED

MATCHES J171/GRAPE_SENSE_FLEX_ROT_051-04774_1.0.0 15 NOV 2018

CRITICAL J0400
505066-5422
F-ST-SM

MLB APN: 516S00063
FLEX APN: 516S00064

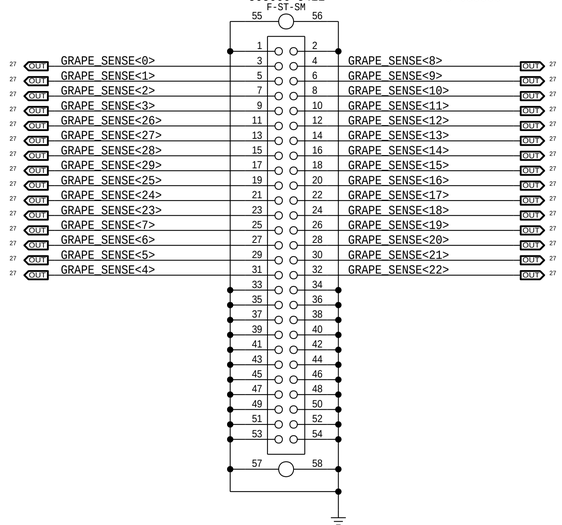

MATCHES J171/GRAPE_DRIVE_FLEX_ROT_051-04775_0.3.0 30 NOV 2018

CRITICAL J0401
505066-4222
F-ST-SM

MLB APN: 516S00224
FLEX APN: 516S00225

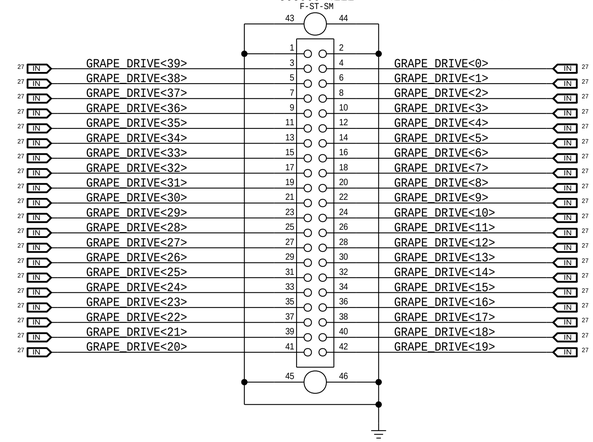

SYNC_MASTER=J71B_MLB_B1 SYNC_DATE=07/23/2018

PAGE TITLE
TOUCH: CONNS

Apple Inc.

DRAWING NUMBER 051-04464
SIZE D
REVISION 4.0.0
BRANCH
PAGE 32 OF 121
SHEET 29 OF 48

NOTICE OF PROPRIETARY PROPERTY:

THE INFORMATION CONTAINED HEREIN IS THE PROPRIETARY PROPERTY OF APPLE INC.
THE POSESSOR AGREES TO THE FOLLOWING:
I TO MAINTAIN THIS DOCUMENT IN CONFIDENCE
II NOT TO REPRODUCE OR COPY IT
III NOT TO REVEAL OR PUBLISH IT IN WHOLE OR PART
IV ALL RIGHTS RESERVED

IO FLEX HOTBAR PADS

MLB 998-5877
FLEX 998-5876

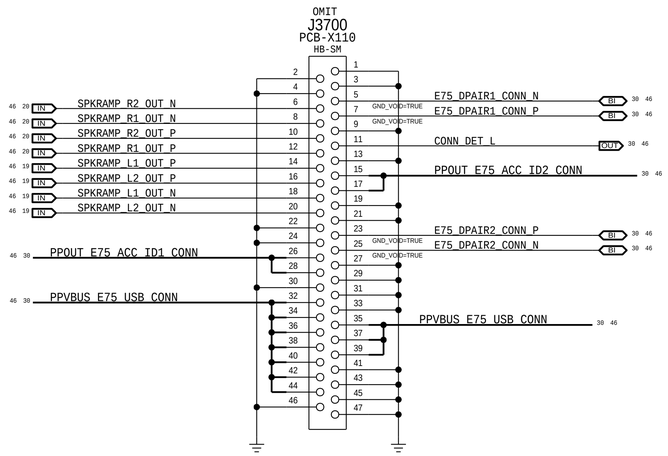

PINOUT MATCHES IO_FLEX 4.2.0 3/12/13

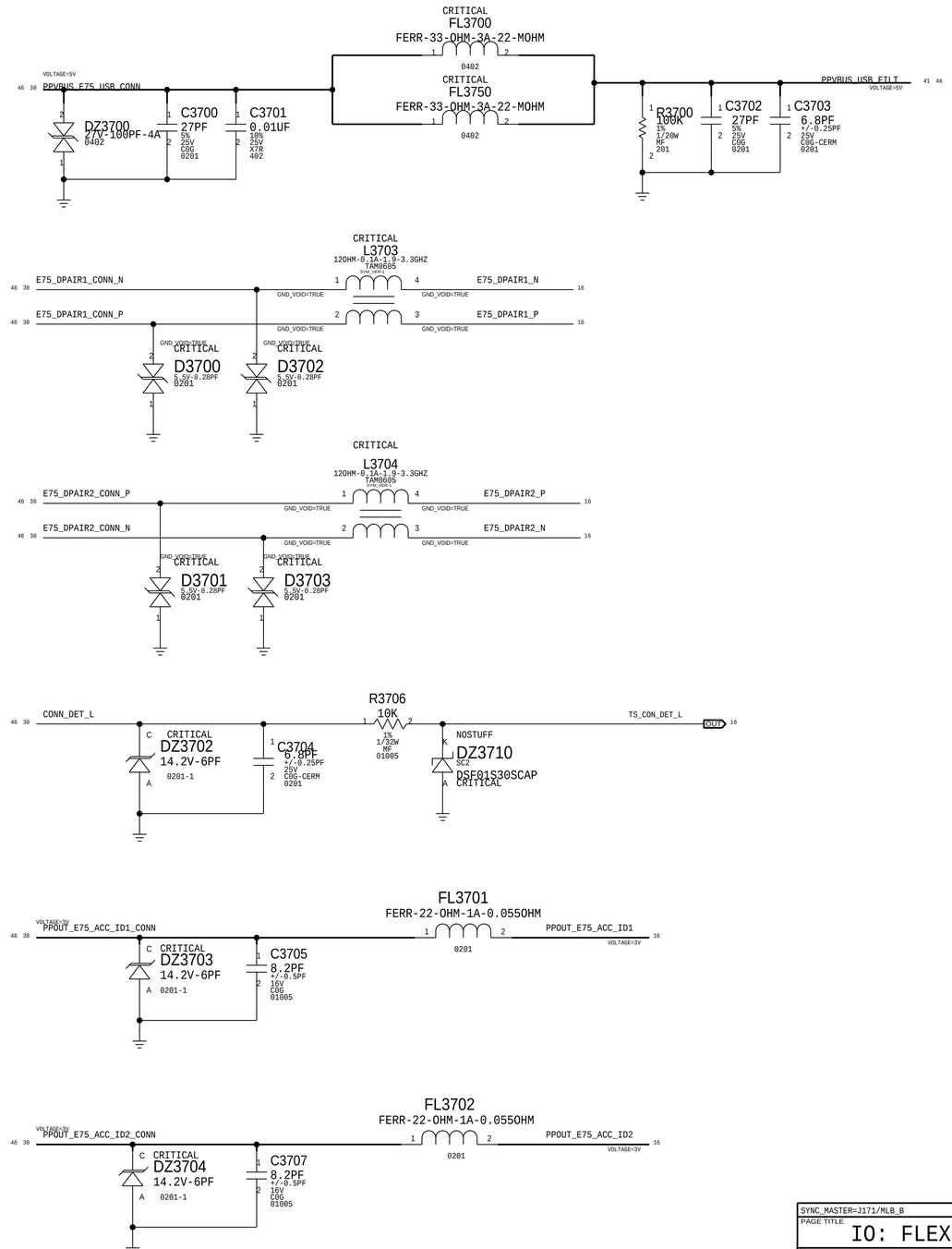

SYNC_MASTER=J171/MLB_B SYNC_DATE=10/24/2018

PAGE TITLE
IO: FLEX HOTBAR & FILTERS

Apple Inc.

DRAWING NUMBER 051-04464 SIZE D
REVISION 4.0.0
BRANCH
PAGE 37 OF 121
SHEET 30 OF 48

NOTICE OF PROPRIETARY PROPERTY:
THE INFORMATION CONTAINED HEREIN IS THE PROPRIETARY PROPERTY OF APPLE INC.
THE POSESSOR AGREES TO THE FOLLOWING:
I TO MAINTAIN THIS DOCUMENT IN CONFIDENCE
II NOT TO REPRODUCE OR COPY IT
III NOT TO REVEAL OR PUBLISH IT IN WHOLE OR PART
IV ALL RIGHTS RESERVED

HOME-BUTTON-MESA FLEX CONN

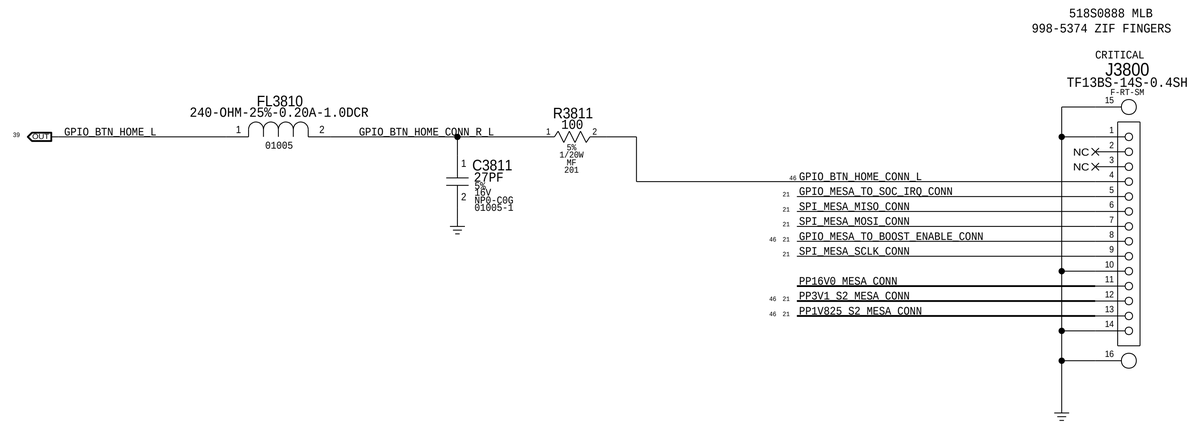

SYNC_MASTER=J171/MLB_B SYNC_DATE=10/24/2018

PAGE TITLE
BTN: HOME & MESA

Apple Inc.

DRAWING NUMBER 051-04464
SIZE D
REVISION 4.0.0
BRANCH
PAGE 38 OF 121
SHEET 31 OF 48

NOTICE OF PROPRIETARY PROPERTY:
THE INFORMATION CONTAINED HEREIN IS THE PROPRIETARY PROPERTY OF APPLE INC.
THE POSESSOR AGREES TO THE FOLLOWING:
I TO MAINTAIN THIS DOCUMENT IN CONFIDENCE
II NOT TO REPRODUCE OR COPY IT
III NOT TO REVEAL OR PUBLISH IT IN WHOLE OR PART
IV ALL RIGHTS RESERVED

EDP CONNECTOR SUPPORT

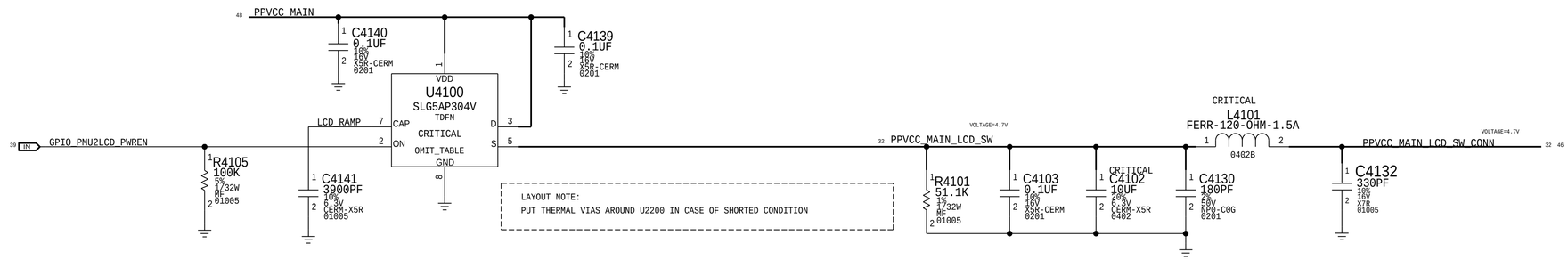

LAYOUT NOTE:
PUT THERMAL VIAS AROUND U2200 IN CASE OF SHORTED CONDITION

PART#	QTY	DESCRIPTION	REFERENCE DESIGNATOR(S)	CRITICAL	BOM OPTION
353S4272	1	IC,SLG5AP1423V	U4100	CRITICAL	

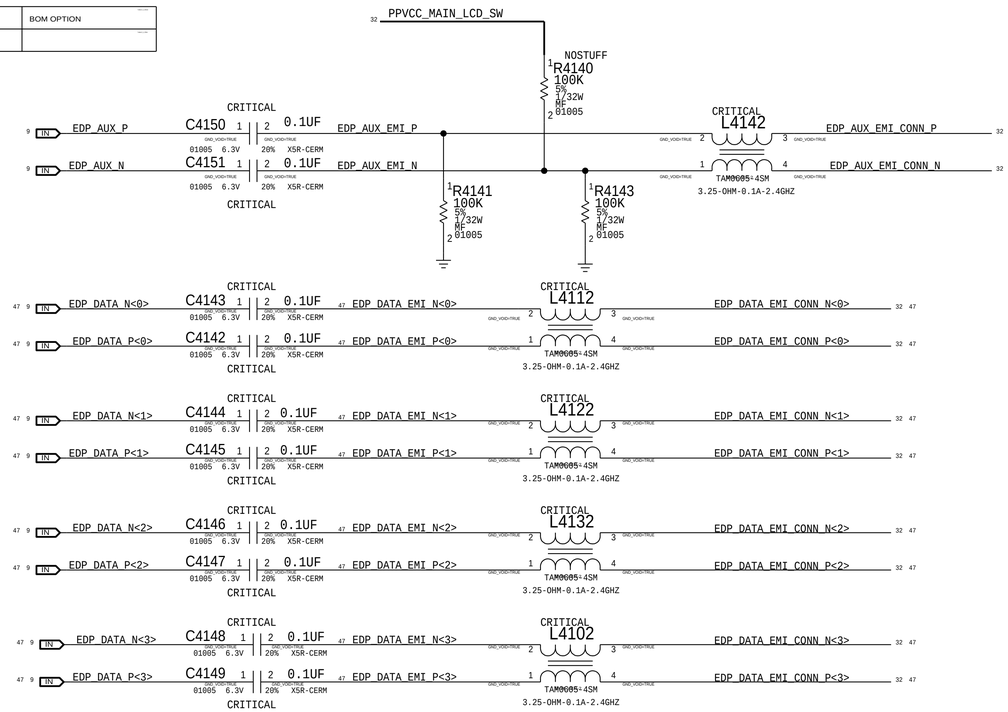

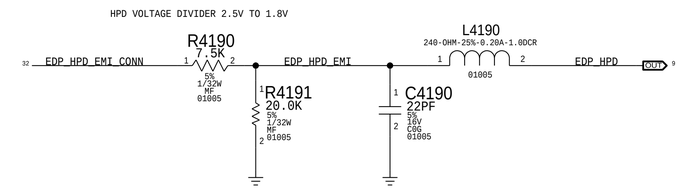

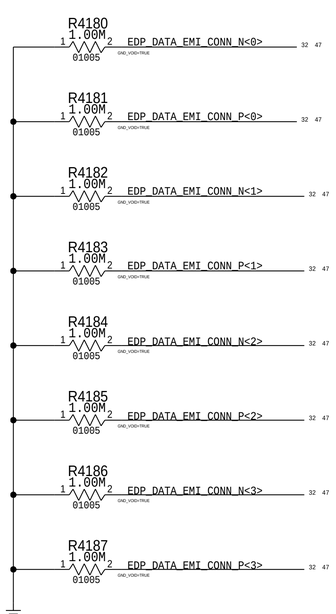

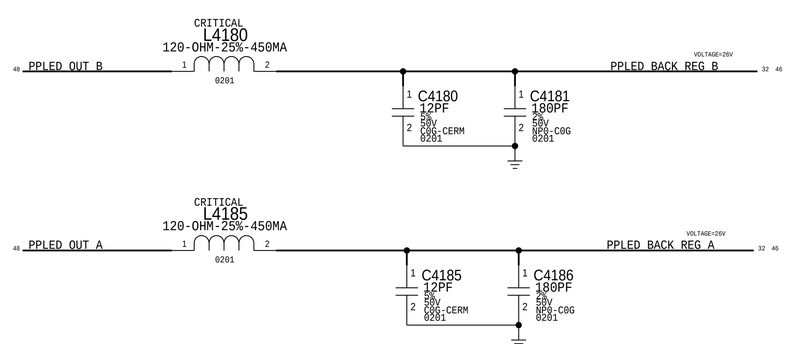

EDP CONNECTOR

PINOUT MATCHES DISPLAY_EDP_FLEX 1.0.0 1/7/13
APN 516S0784

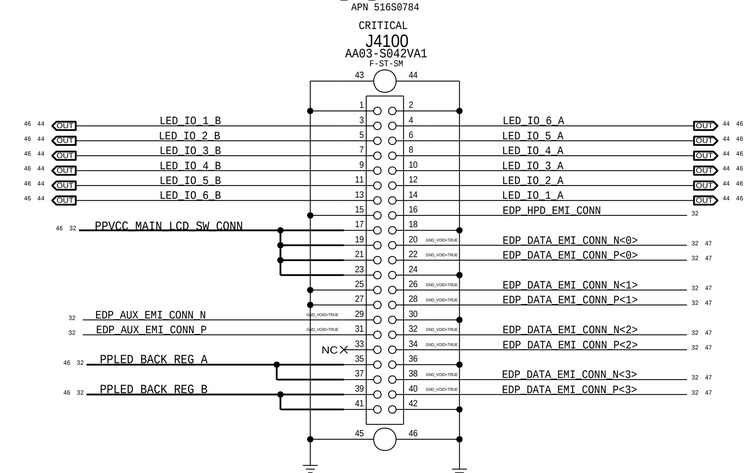

SYNC_MASTER=J171/MLB_B SYNC_DATE=10/24/2018

PAGE TITLE
DISPLAY: EDP CONN

Apple Inc.

DRAWING NUMBER 051-04464 SIZE D
REVISION 4.0.0
BRANCH
PAGE 41 OF 121
SHEET 32 OF 48

NOTICE OF PROPRIETARY PROPERTY:
THE INFORMATION CONTAINED HEREIN IS THE PROPRIETARY PROPERTY OF APPLE INC.
THE POSESSOR AGREES TO THE FOLLOWING:
I TO MAINTAIN THIS DOCUMENT IN CONFIDENCE
II NOT TO REPRODUCE OR COPY IT
III NOT TO REVEAL OR PUBLISH IT IN WHOLE OR PART
IV ALL RIGHTS RESERVED

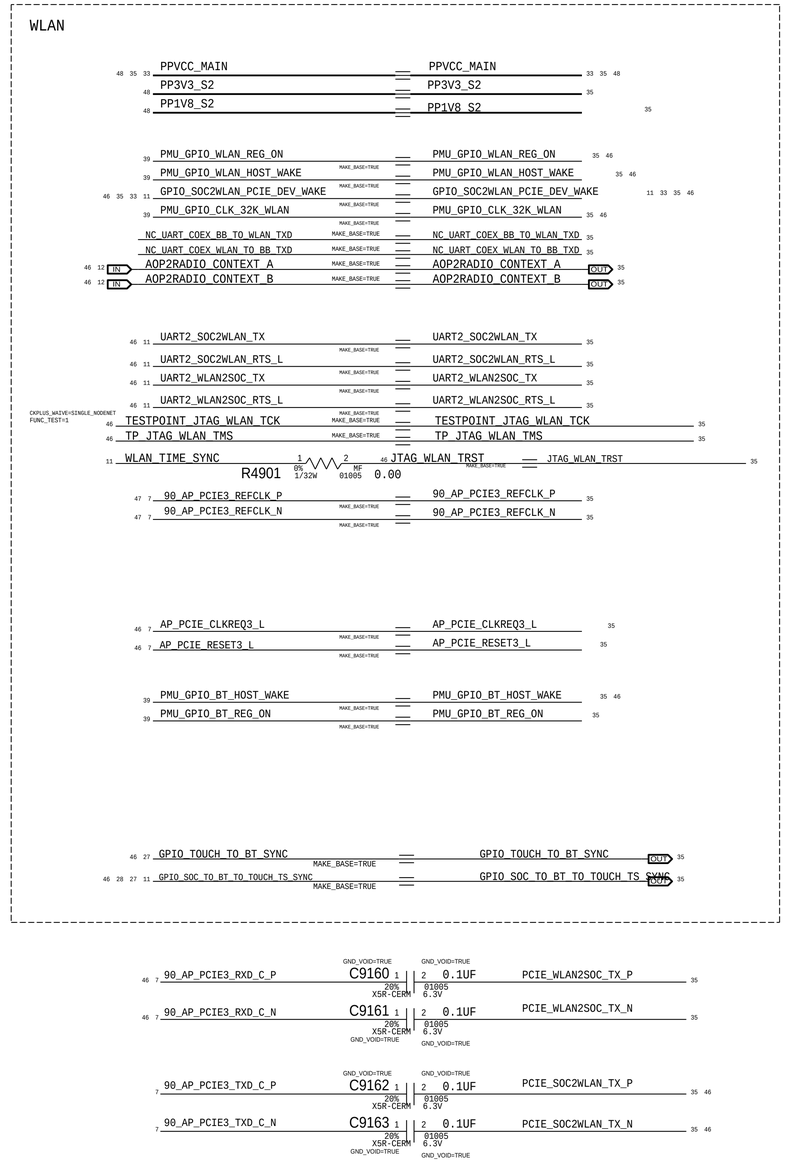

SYNC_MASTER=J171/MLB_B SYNC_DATE=10/24/2018

PAGE TITLE

RADIOS: ALIASES

Apple Inc.

DRAWING NUMBER 051-04464 SIZE D

REVISION 4.0.0

BRANCH

PAGE 49 OF 121

SHEET 33 OF 48

NOTICE OF PROPRIETARY PROPERTY:

THE INFORMATION CONTAINED HEREIN IS THE PROPRIETARY PROPERTY OF APPLE INC.
THE POSESSOR AGREES TO THE FOLLOWING:

I TO MAINTAIN THIS DOCUMENT IN CONFIDENCE

II NOT TO REPRODUCE OR COPY IT

III NOT TO REVEAL OR PUBLISH IT IN WHOLE OR PART

IV ALL RIGHTS RESERVED

VENUS

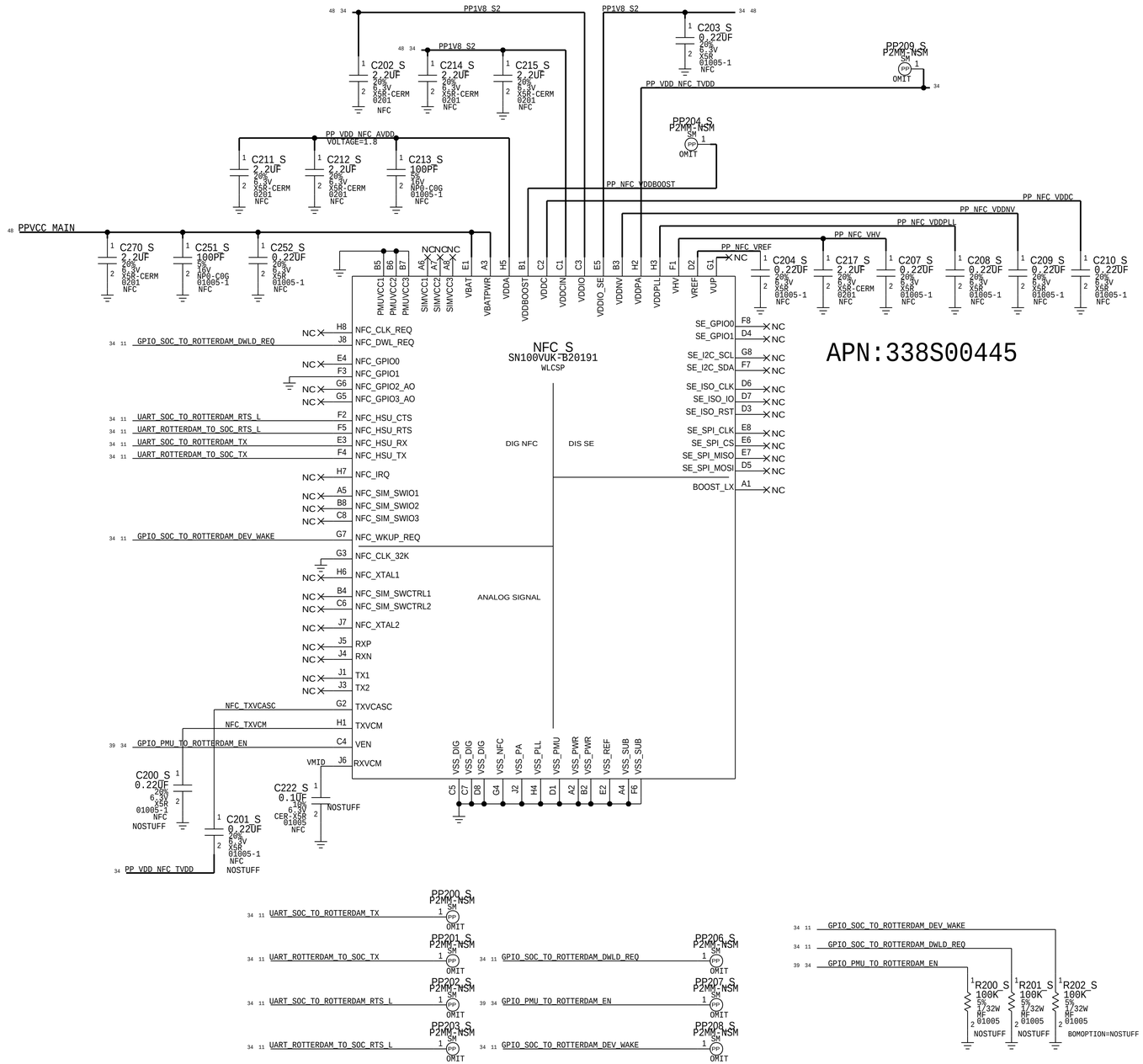

SYNC_MASTER=J171/MLB_B SYNC_DATE=10/24/2018

PAGE TITLE: VENUS

Apple Inc.

DRAWING NUMBER: 051-04464 SIZE: D

REVISION: 4.0.0

BRANCH

PAGE: 70 OF 121

SHEET: 34 OF 48

NOTICE OF PROPRIETARY PROPERTY:
THE INFORMATION CONTAINED HEREIN IS THE PROPRIETARY PROPERTY OF APPLE INC.
THE POSESSOR AGREES TO THE FOLLOWING:
I TO MAINTAIN THIS DOCUMENT IN CONFIDENCE
II NOT TO REPRODUCE OR COPY IT
III NOT TO REVEAL OR PUBLISH IT IN WHOLE OR PART
IV ALL RIGHTS RESERVED

WIFI/BT: J171: YEBISU MODULE, POWER, I/O

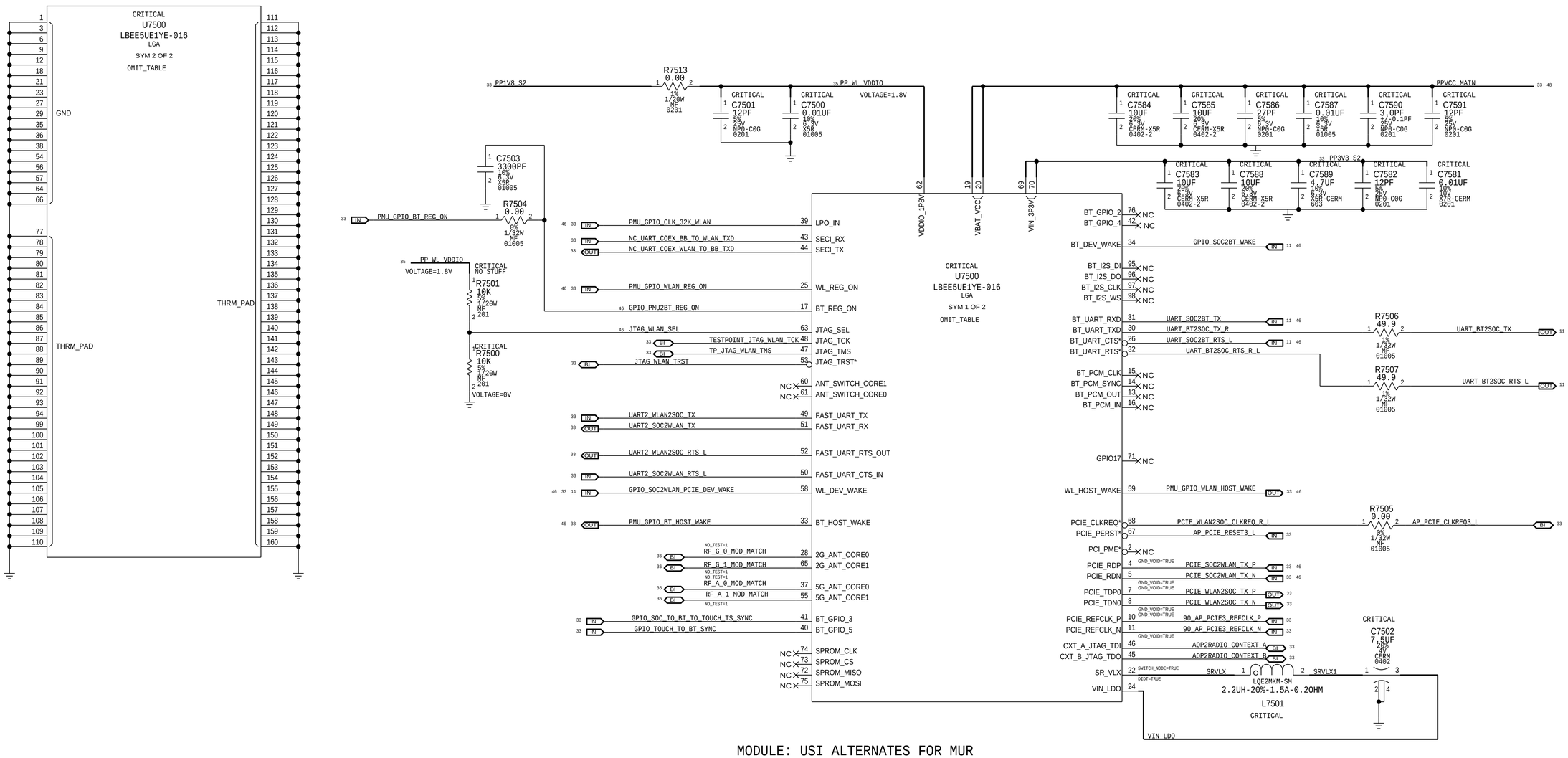

MODULE: USI ALTERNATES FOR MUR

PART NUMBER	ALTERNATE FOR PART NUMBER	BOM OPTION	REF DES	COMMENTS:
339S00447	339S00445		U7500	USI ALT FOR MUR
339S00448	339S00446		U7500	CIDRE USI ALT FOR MUR

MODULE: BOM OPTION FOR CIDRE IN MLB_A, NOT IN MLB_B

PART#	QTY	DESCRIPTION	REFERENCE DESIGNATOR(S)	CRITICAL	BOM OPTION
339S00445	1	YEBISU MURATA ES2	U7500	CRITICAL	MLB_B
339S00446	1	YEBISU CIDRE MURATA ES2	U7500	CRITICAL	MLB_A

LAST UPDATED: 06/15/2017

SYNC_MASTER=J171/MLB_B SYNC_DATE=10/24/2018

PAGE TITLE
WIFI/BT: MODULE

Apple Inc.

DRAWING NUMBER 051-04464 SIZE D
REVISION 4.0.0
BRANCH
PAGE 75 OF 121
SHEET 35 OF 48

NOTICE OF PROPRIETARY PROPERTY:
THE INFORMATION CONTAINED HEREIN IS THE PROPRIETARY PROPERTY OF APPLE INC.
THE POSESSOR AGREES TO THE FOLLOWING:
I TO MAINTAIN THIS DOCUMENT IN CONFIDENCE
II NOT TO REPRODUCE OR COPY IT
III NOT TO REVEAL OR PUBLISH IT IN WHOLE OR PART
IV ALL RIGHTS RESERVED

WIFI/BT: J171 (WIFI/BT ONLY)RF FRONT END

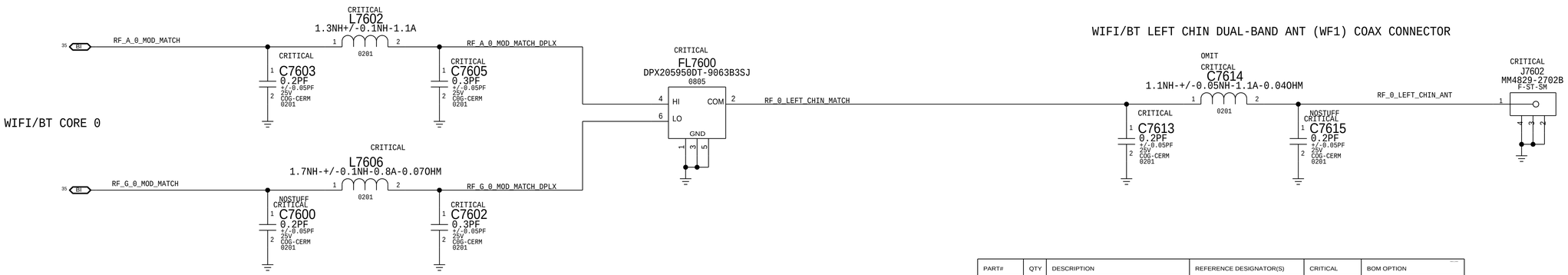

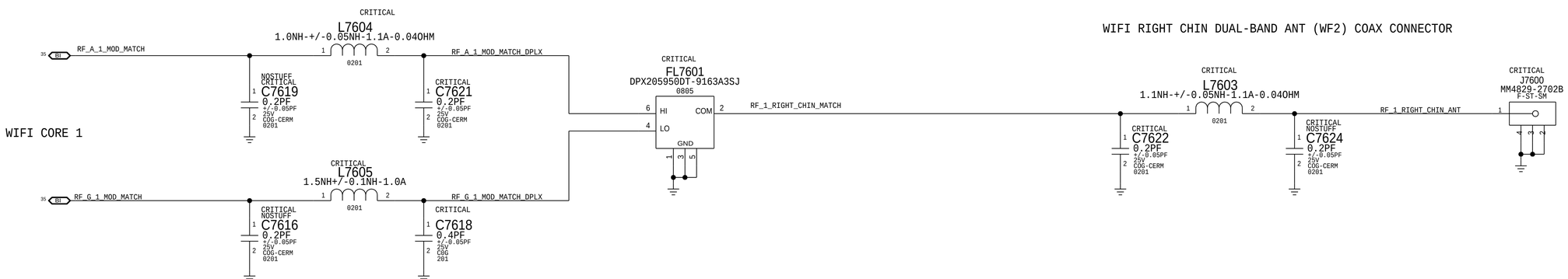

PART#	QTY	DESCRIPTION	REFERENCE DESIGNATOR(S)	CRITICAL	BOM OPTION
152S00150	1	IND,FILM,0.7NH,+/-0.05NH,1.1A,LH-Q,0201	C7614	CRITICAL	

LAST UPDATED: 11/08/2018

SYNC_MASTER=J171/MLB_A SYNC_DATE=10/24/2018

PAGE TITLE: WIFI/BT: J171 FRONT END

Apple Inc.

DRAWING NUMBER: 051-04464 SIZE: D

REVISION: 4.0.0

BRANCH:

PAGE: 77 OF 121

SHEET: 36 OF 48

NOTICE OF PROPRIETARY PROPERTY:
THE INFORMATION CONTAINED HEREIN IS THE PROPRIETARY PROPERTY OF APPLE INC.
THE POSESSOR AGREES TO THE FOLLOWING:
I TO MAINTAIN THIS DOCUMENT IN CONFIDENCE
II NOT TO REPRODUCE OR COPY IT
III NOT TO REVEAL OR PUBLISH IT IN WHOLE OR PART
IV ALL RIGHTS RESERVED

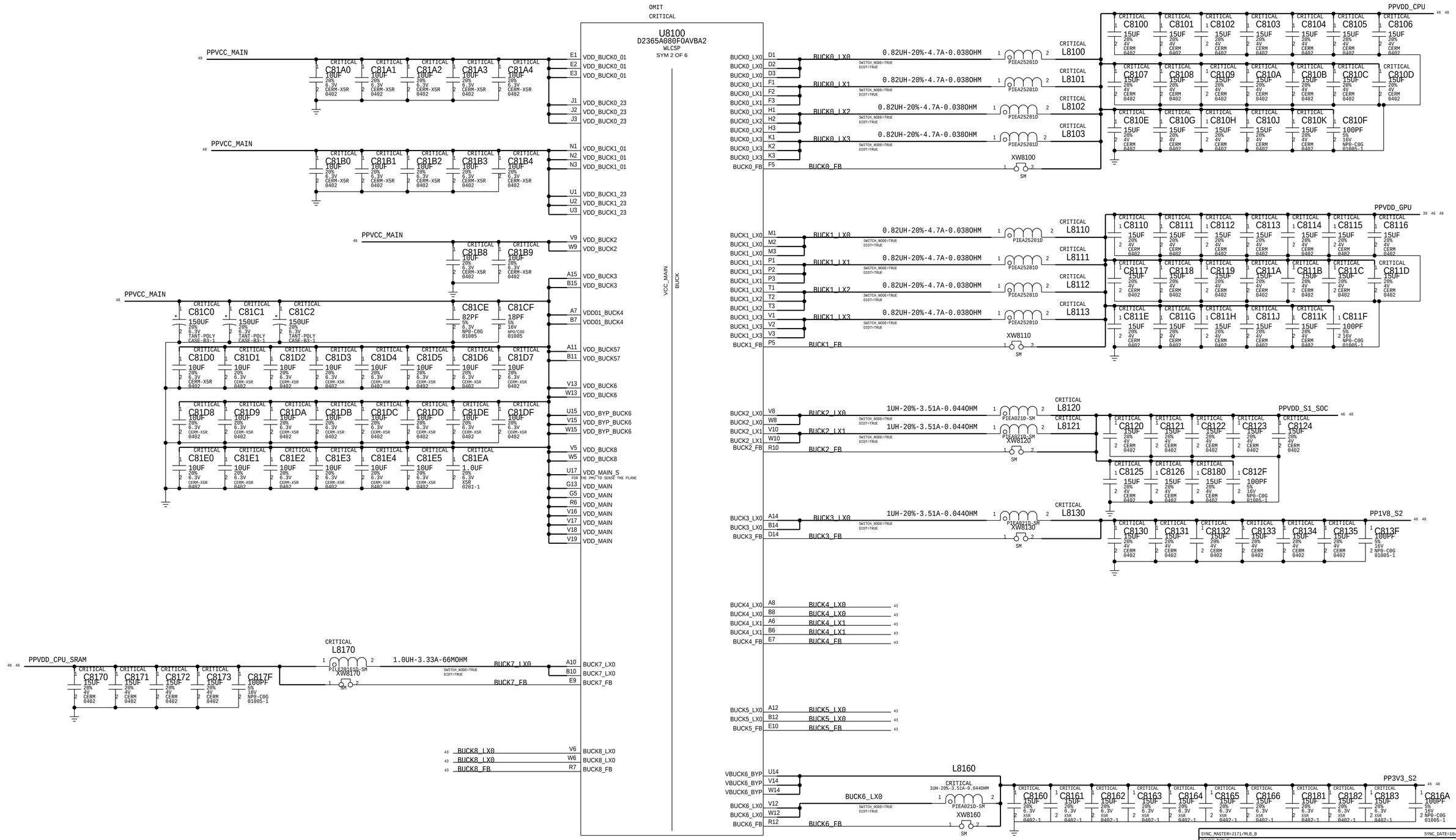
OMIT
CRITICAL
U8100
D2365A080F0AVBA2
WLCSP
SYM 2 OF 6
VCC_MAIN
BUCK
PPVCC_MAIN
C81A0 C81A1 C81A2 C81A3 C81A4
E1 E2 E3 J1 J2 J3
VDD_BUCK0_01 VDD_BUCK0_01 VDD_BUCK0_01 VDD_BUCK0_23 VDD_BUCK0_23 VDD_BUCK0_23
C81B0 C81B1 C81B2 C81B3 C81B4
N1 N2 N3 U1 U2 U3
VDD_BUCK1_01 VDD_BUCK1_01 VDD_BUCK1_01 VDD_BUCK1_23 VDD_BUCK1_23 VDD_BUCK1_23
C81B8 C81B9
V9 W9
VDD_BUCK2 VDD_BUCK2
A15 B15
VDD_BUCK3 VDD_BUCK3
C81C0 C81C1 C81C2
150UF 20% 6.3V TANT-POLY CASE-B3-1
C81CE 82PF 5% 6.3V NP0-C0G 01005
C81CF 18PF 5% 16V NP0-C0G 01005
A7 B7
VDD01_BUCK4 VDD01_BUCK4
C81D0 C81D1 C81D2 C81D3 C81D4 C81D5 C81D6 C81D7
A11 B11
VDD_BUCK57 VDD_BUCK57
V13 W13
VDD_BUCK6 VDD_BUCK6
C81D8 C81D9 C81DA C81DB C81DC C81DD C81DE C81DF
U15 V15 W15
VDD_BYP_BUCK6 VDD_BYP_BUCK6 VDD_BYP_BUCK6
C81E0 C81E1 C81E2 C81E3 C81E4 C81E5 C81EA
1.0UF 20% 6.3V X5R 0201-1
V5 W5
VDD_BUCK8 VDD_BUCK8
U17
VDD_MAIN_S
FOR THE PMU TO SENSE THE PLANE
G13 G5 R6 V16 V17 V18 V19
VDD_MAIN VDD_MAIN VDD_MAIN VDD_MAIN VDD_MAIN VDD_MAIN VDD_MAIN
PPVDD_CPU_SRAM
C8170 C8171 C8172 C8173 C817F
15UF 20% 4V CERM 0402
100PF 5% 16V NP0-C0G 01005-1
L8170
PIEA021D-SM
XW8170
SM
1.0UH-3.33A-66MOHM
SWITCH_NODE=TRUE
DIDT=TRUE
BUCK7_LX0
BUCK7_FB
A10 B10 E9
BUCK7_LX0 BUCK7_LX0 BUCK7_FB
BUCK8_LX0 BUCK8_LX0 BUCK8_FB
V6 W6 R7
BUCK8_LX0 BUCK8_LX0 BUCK8_FB
PPVDD_CPU
C8100 C8101 C8102 C8103 C8104 C8105 C8106
C8107 C8108 C8109 C810A C810B C810C C810D
C810E C810G C810H C810J C810K C810F
BUCK0_LX0 BUCK0_LX1 BUCK0_LX2 BUCK0_LX3 BUCK0_FB
D1 D2 D3 F1 F2 F3 H1 H2 H3 K1 K2 K3 F5
BUCK0_LX0 BUCK0_LX1 BUCK0_LX2 BUCK0_LX3
0.82UH-20%-4.7A-0.0380HM
L8100 L8101 L8102 L8103
XW8100
PPVDD_GPU
C8110 C8111 C8112 C8113 C8114 C8115 C8116
C8117 C8118 C8119 C811A C811B C811C C811D
C811E C811G C811H C811J C811K C811F
BUCK1_LX0 BUCK1_LX1 BUCK1_LX2 BUCK1_LX3 BUCK1_FB
M1 M2 M3 P1 P2 P3 T1 T2 T3 V1 V2 V3 P5
BUCK1_LX0 BUCK1_LX1 BUCK1_LX2 BUCK1_LX3
0.82UH-20%-4.7A-0.0380HM
L8110 L8111 L8112 L8113
XW8110
PPVDD_S1_SOC
C8120 C8121 C8122 C8123 C8124
C8125 C8126 C8180 C812F
100PF 5% 16V NP0-C0G 01005-1
BUCK2_LX0 BUCK2_LX1 BUCK2_FB
V8 W8 V10 W10 R10
BUCK2_LX0 BUCK2_LX1
1UH-20%-3.51A-0.0440HM
L8120 L8121
XW8120
PP1V8_S2
C8130 C8131 C8132 C8133 C8134 C8135 C813F
BUCK3_LX0 BUCK3_FB
A14 B14 D14
BUCK3_LX0
1UH-20%-3.51A-0.0440HM
L8130
XW8130
BUCK4_LX0 BUCK4_LX1 BUCK4_FB
A8 B8 A6 B6 E7
BUCK5_LX0 BUCK5_FB
A12 B12 E10
VBUCK6_BYP BUCK6_LX0 BUCK6_FB
U14 V14 W14 V12 W12 R12
BUCK6_LX0
L8160
1UH-20%-3.51A-0.0440HM
XW8160
PP3V3_S2
C8160 C8161 C8162 C8163 C8164 C8165 C8166 C8181 C8182 C8183 C816A
15UF 20% 6.3V X5R 0402-1
100PF 5% 16V NP0-C0G 01005-1
SYNC_MASTER=J171/MLB_B
SYNC_DATE=10/24/2018
PAGE TITLE
POWER: ANGEL (1/5)
Apple Inc.
DRAWING NUMBER
051-04464
SIZE
D
REVISION
4.0.0
BRANCH
PAGE
81 OF 121
SHEET
37 OF 48
NOTICE OF PROPRIETARY PROPERTY:
THE INFORMATION CONTAINED HEREIN IS THE PROPRIETARY PROPERTY OF APPLE INC.
THE POSESSOR AGREES TO THE FOLLOWING:
I TO MAINTAIN THIS DOCUMENT IN CONFIDENCE
II NOT TO REPRODUCE OR COPY IT
III NOT TO REVEAL OR PUBLISH IT IN WHOLE OR PART
IV ALL RIGHTS RESERVED

PART NUMBER	ALTERNATE FOR PART NUMBER	BOM OPTION	REF DES	COMMENTS:
138S0703	138S0648		C8233	AND 7 MORE REFDES

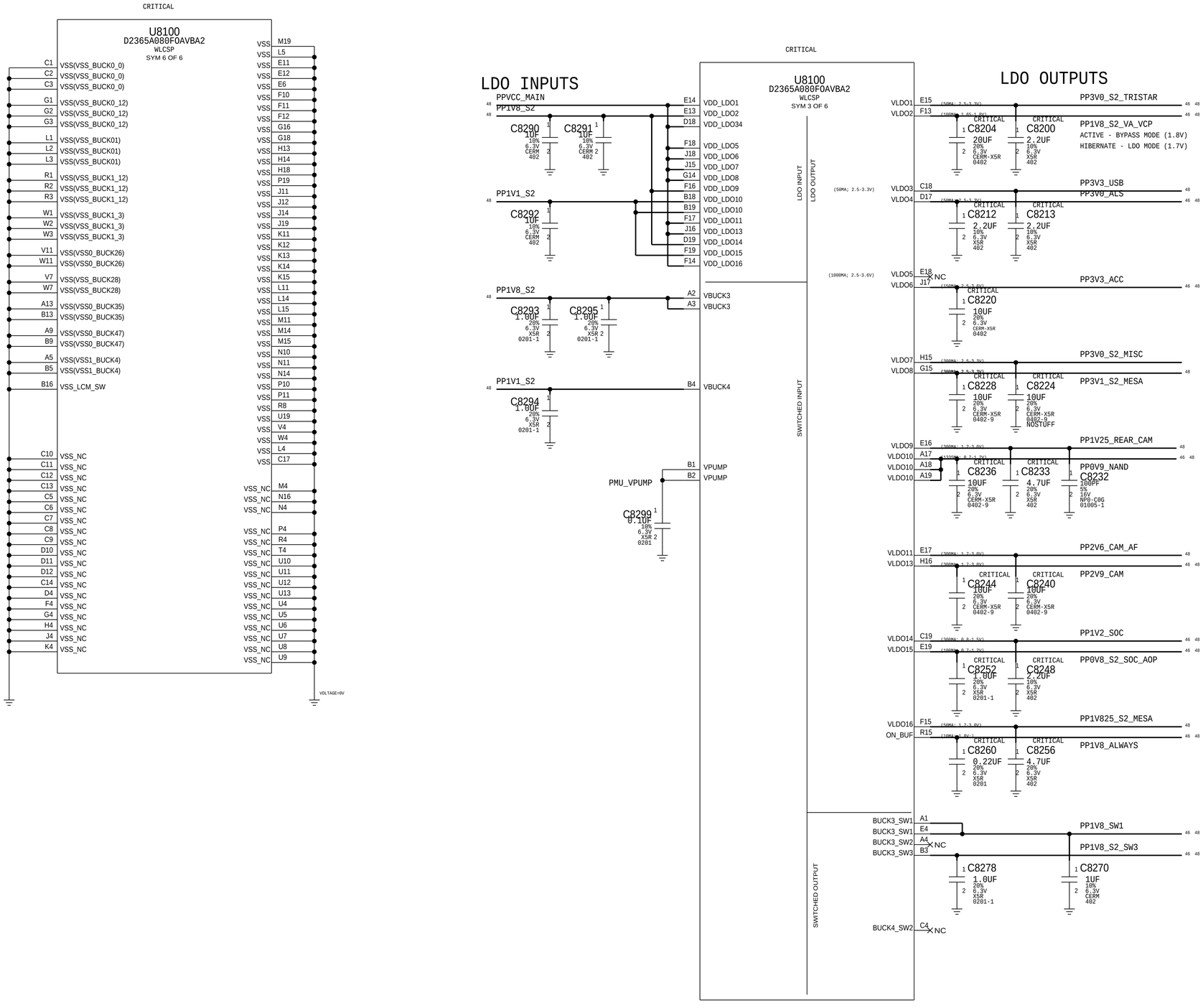

SYNC_MASTER=J171/MLB_B SYNC_DATE=10/24/2018

PAGE TITLE

POWER: ANGEL (2/5)

Apple Inc.

DRAWING NUMBER 051-04464 SIZE D

REVISION 4.0.0

BRANCH

PAGE 82 OF 121

SHEET 38 OF 48

NOTICE OF PROPRIETARY PROPERTY:
THE INFORMATION CONTAINED HEREIN IS THE PROPRIETARY PROPERTY OF APPLE INC.
THE POSESSOR AGREES TO THE FOLLOWING:
I TO MAINTAIN THIS DOCUMENT IN CONFIDENCE
II NOT TO REPRODUCE OR COPY IT
III NOT TO REVEAL OR PUBLISH IT IN WHOLE OR PART
IV ALL RIGHTS RESERVED

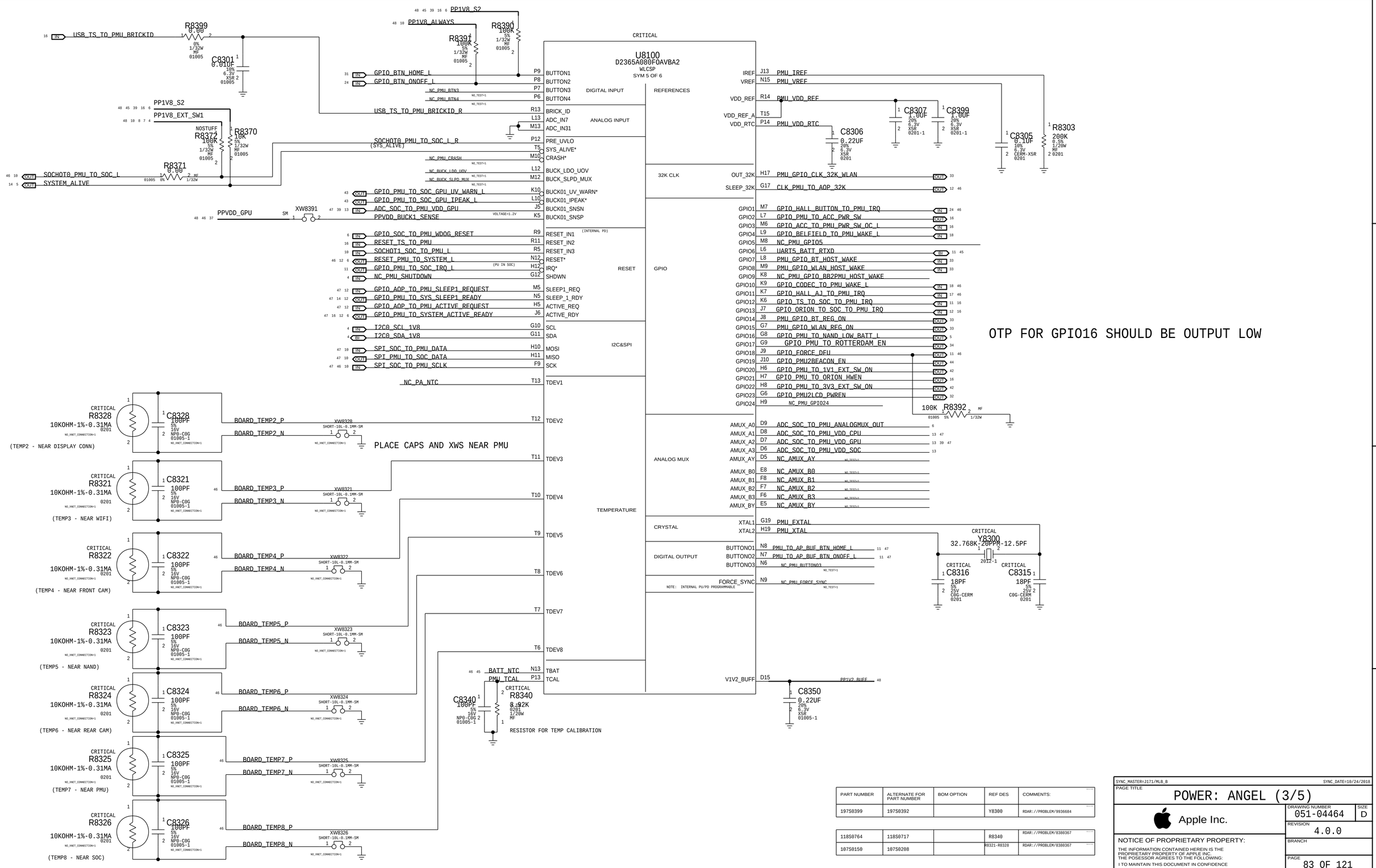

PART NUMBER	ALTERNATE FOR PART NUMBER	BOM OPTION	REF DES	COMMENTS:
197S0399	197S0392		Y8300	RDAR://PROBLEM/9936684
118S0764	118S0717		R8340	RDAR://PROBLEM/8380367
107S0150	107S0208		R8321-R8328	RDAR://PROBLEM/8380367

SYNC_MASTER=J171/MLB_B SYNC_DATE=10/24/2018

PAGE TITLE

POWER: ANGEL (3/5)

Apple Inc.

DRAWING NUMBER 051-04464 SIZE D

REVISION 4.0.0

BRANCH

PAGE 83 OF 121

SHEET 39 OF 48

NOTICE OF PROPRIETARY PROPERTY:
THE INFORMATION CONTAINED HEREIN IS THE PROPRIETARY PROPERTY OF APPLE INC.
THE POSESSOR AGREES TO THE FOLLOWING:
I TO MAINTAIN THIS DOCUMENT IN CONFIDENCE
II NOT TO REPRODUCE OR COPY IT
III NOT TO REVEAL OR PUBLISH IT IN WHOLE OR PART
IV ALL RIGHTS RESERVED

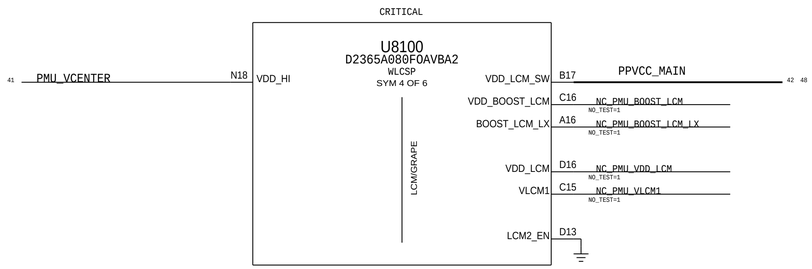

SYNC_MASTER=J171/MLB_B SYNC_DATE=10/24/2018

PAGE TITLE

POWER: ANGEL (4/5)

Apple Inc.

DRAWING NUMBER 051-04464

SIZE D

REVISION 4.0.0

BRANCH

PAGE 84 OF 121

SHEET 40 OF 48

NOTICE OF PROPRIETARY PROPERTY:

THE INFORMATION CONTAINED HEREIN IS THE PROPRIETARY PROPERTY OF APPLE INC.
THE POSESSOR AGREES TO THE FOLLOWING:

I TO MAINTAIN THIS DOCUMENT IN CONFIDENCE

II NOT TO REPRODUCE OR COPY IT

III NOT TO REVEAL OR PUBLISH IT IN WHOLE OR PART

IV ALL RIGHTS RESERVED

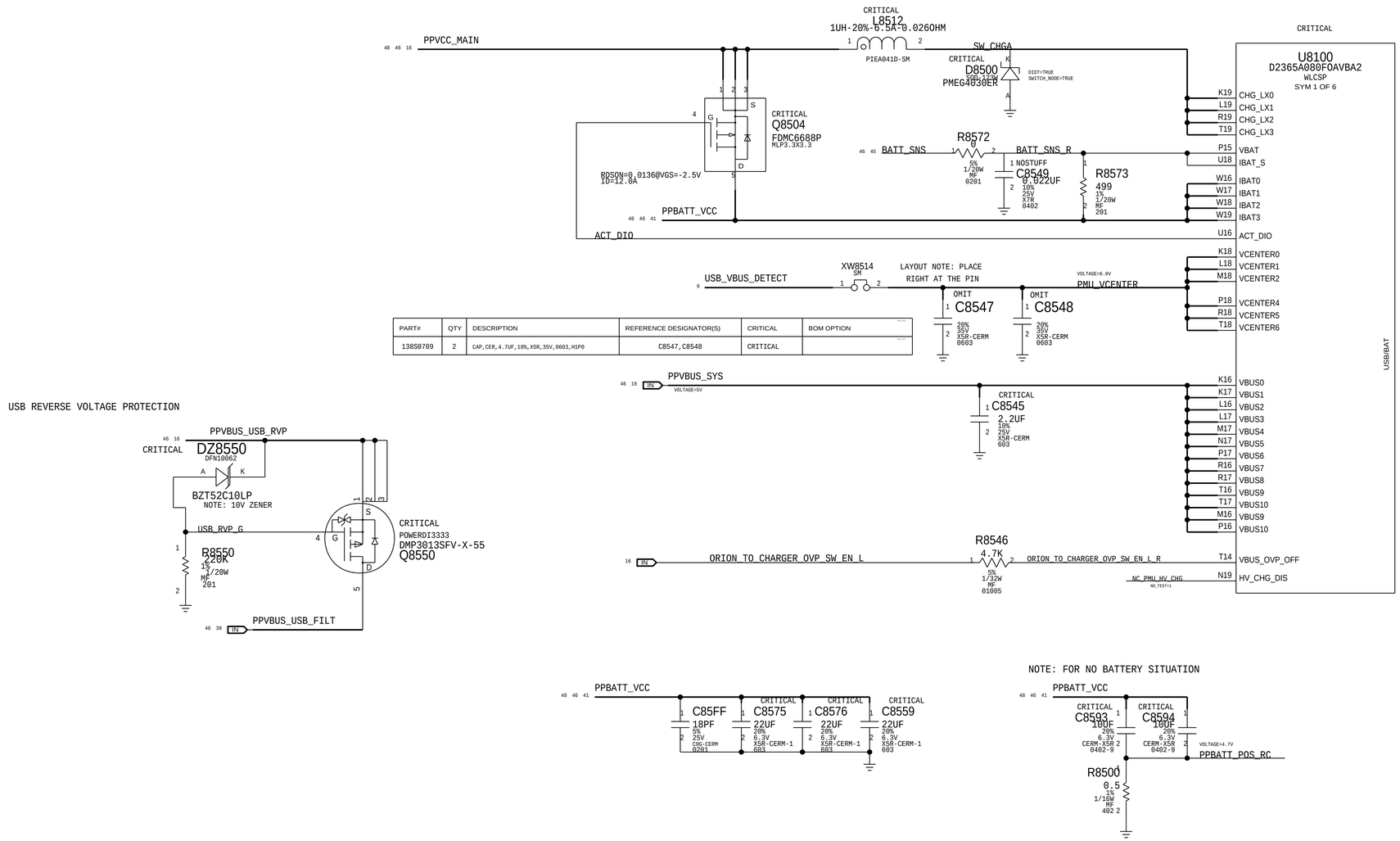

PART#	QTY	DESCRIPTION	REFERENCE DESIGNATOR(S)	CRITICAL	BOM OPTION
138S0709	2	CAP,CER,4.7UF,10%,X5R,35V,0603,H1P0	C8547,C8548	CRITICAL	

USB REVERSE VOLTAGE PROTECTION

NOTE: FOR NO BATTERY SITUATION

SYNC_MASTER=J171/MLB_B
SYNC_DATE=10/24/2018
PAGE TITLE
POWER: ANGEL (5/2)
Apple Inc.
DRAWING NUMBER 051-04464
SIZE D
REVISION 4.0.0
BRANCH
PAGE 85 OF 121
SHEET 41 OF 48
NOTICE OF PROPRIETARY PROPERTY:
THE INFORMATION CONTAINED HEREIN IS THE PROPRIETARY PROPERTY OF APPLE INC.
THE POSESSOR AGREES TO THE FOLLOWING:
I TO MAINTAIN THIS DOCUMENT IN CONFIDENCE
II NOT TO REPRODUCE OR COPY IT
III NOT TO REVEAL OR PUBLISH IT IN WHOLE OR PART
IV ALL RIGHTS RESERVED

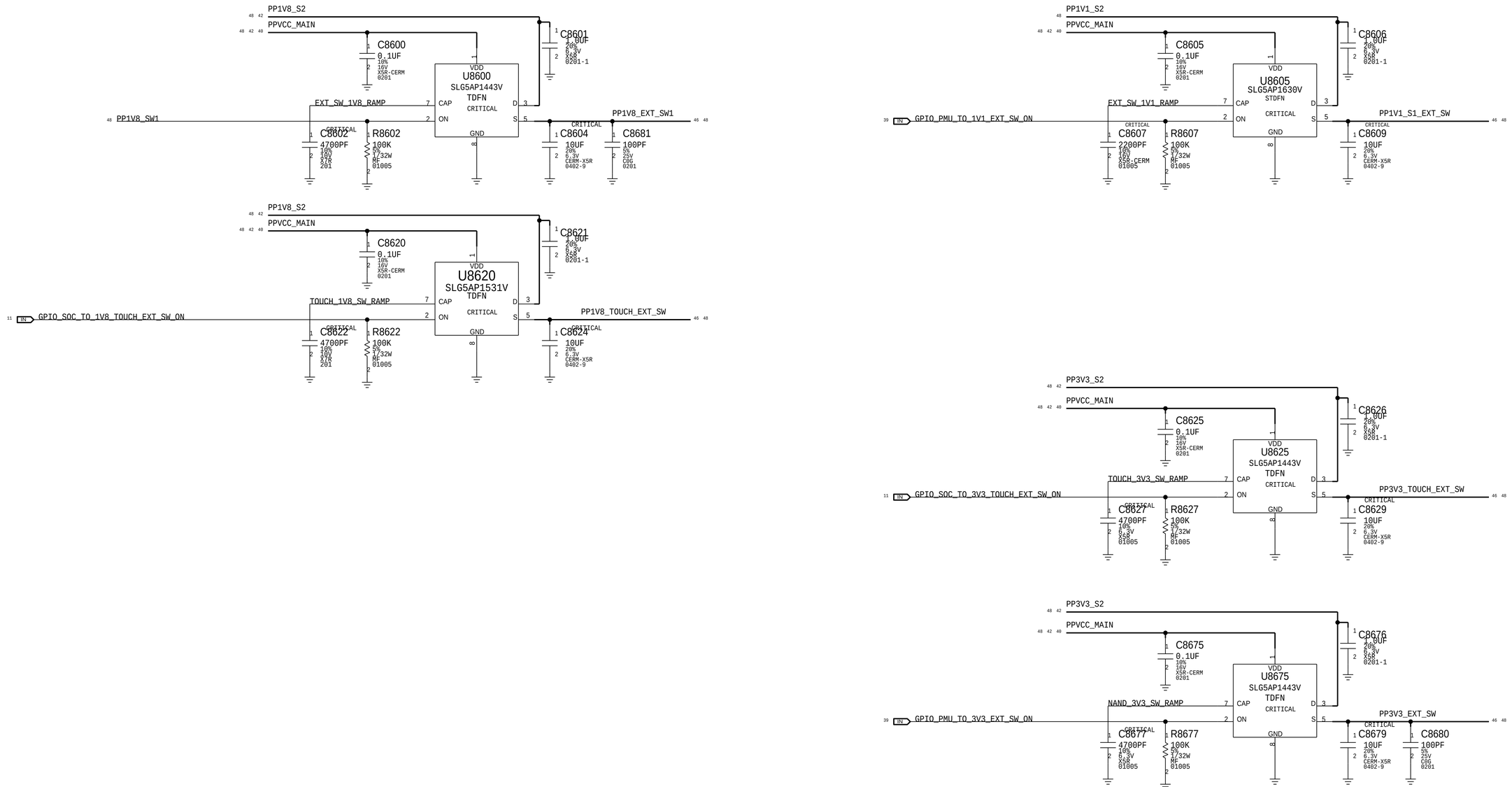

SYNC_MASTER=J171/MLB_B SYNC_DATE=10/24/2018

PAGE TITLE

POWER: EXTERNAL SWITCHES & LDOS

Apple Inc.

DRAWING NUMBER 051-04464 SIZE D

REVISION 4.0.0

BRANCH

PAGE 86 OF 121

SHEET 42 OF 48

NOTICE OF PROPRIETARY PROPERTY:

THE INFORMATION CONTAINED HEREIN IS THE PROPRIETARY PROPERTY OF APPLE INC.
THE POSESSOR AGREES TO THE FOLLOWING:
I TO MAINTAIN THIS DOCUMENT IN CONFIDENCE
II NOT TO REPRODUCE OR COPY IT
III NOT TO REVEAL OR PUBLISH IT IN WHOLE OR PART
IV ALL RIGHTS RESERVED

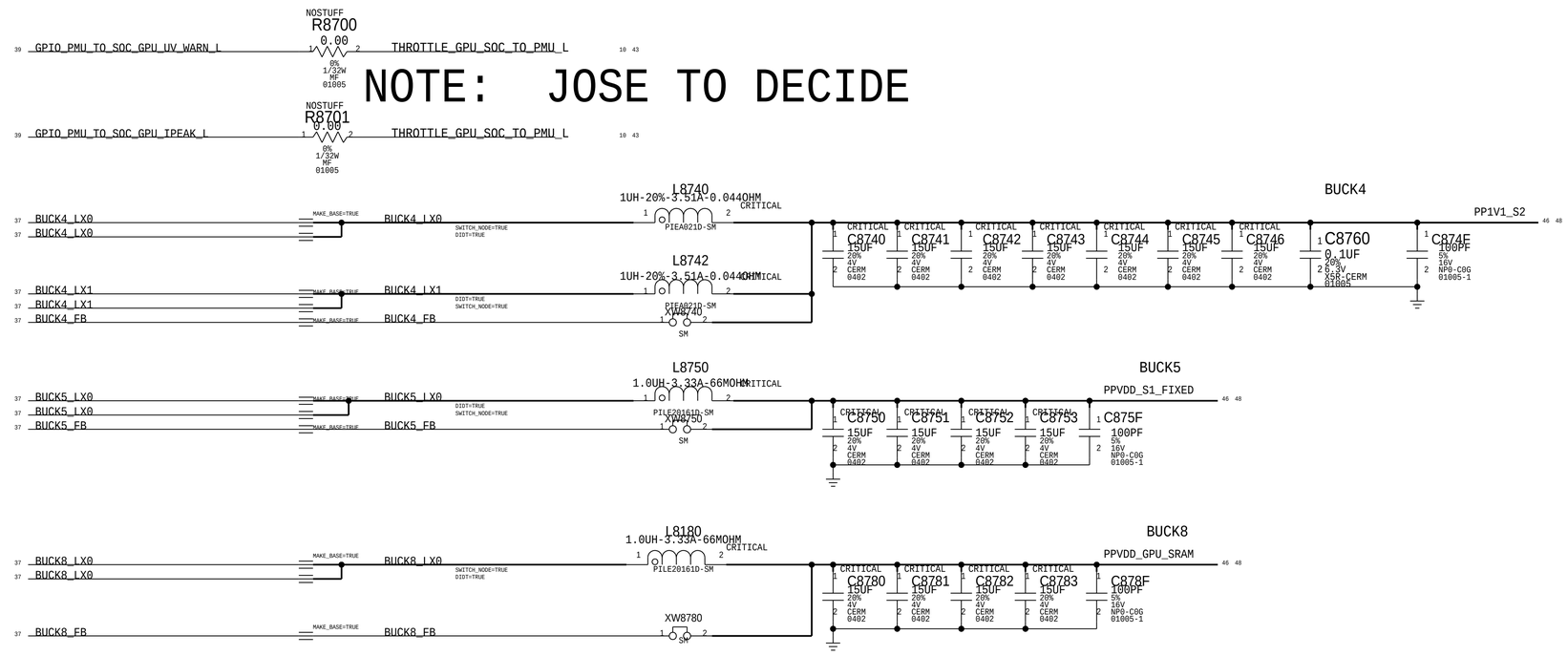

SYNC_MASTER=J171/MLB_B SYNC_DATE=10/24/2018

PAGE TITLE

POWER: BUCKS 4,5,8

Apple Inc.

DRAWING NUMBER 051-04464 SIZE D

REVISION 4.0.0

BRANCH

PAGE 87 OF 121

SHEET 43 OF 48

NOTICE OF PROPRIETARY PROPERTY:

THE INFORMATION CONTAINED HEREIN IS THE PROPRIETARY PROPERTY OF APPLE INC.
THE POSESSOR AGREES TO THE FOLLOWING:

I TO MAINTAIN THIS DOCUMENT IN CONFIDENCE

II NOT TO REPRODUCE OR COPY IT

III NOT TO REVEAL OR PUBLISH IT IN WHOLE OR PART

IV ALL RIGHTS RESERVED

BEACON 2

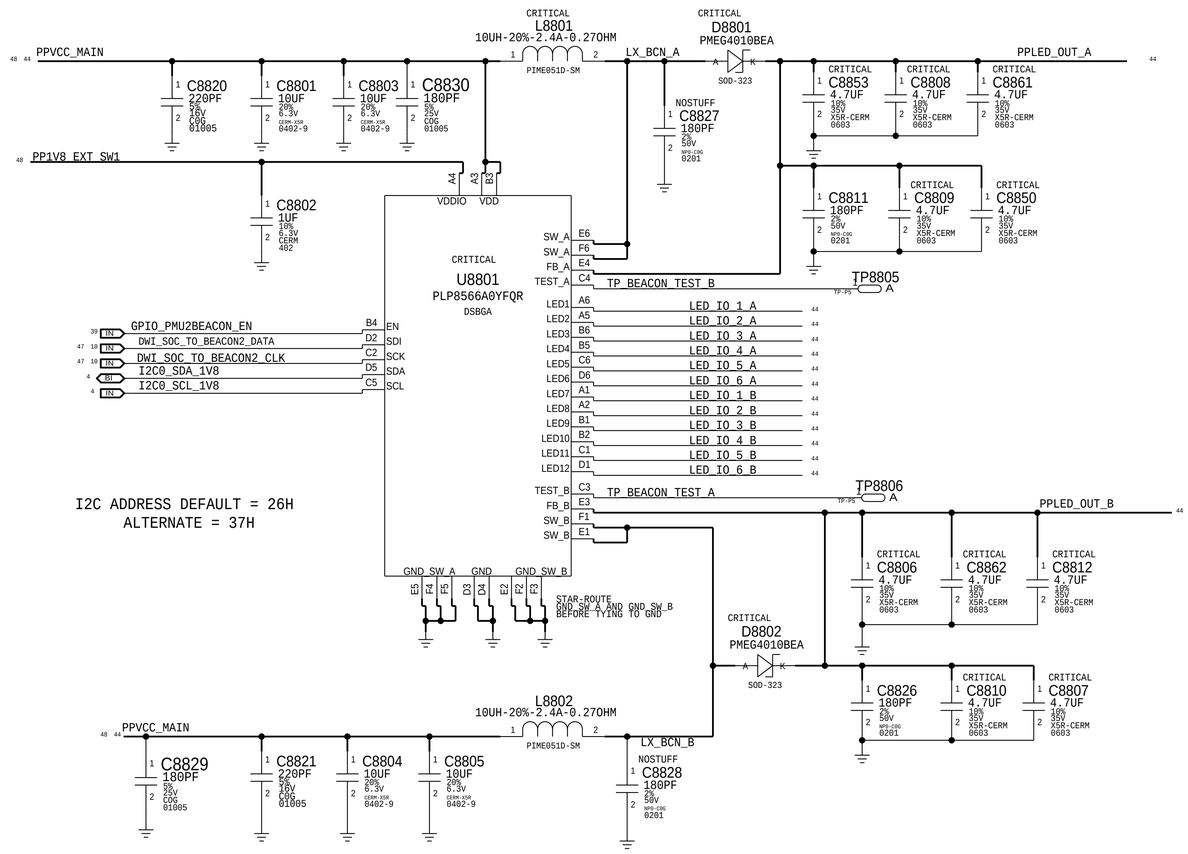

I2C ADDRESS DEFAULT = 26H
ALTERNATE = 37H

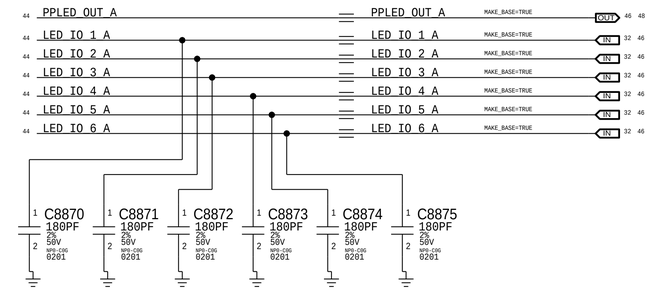

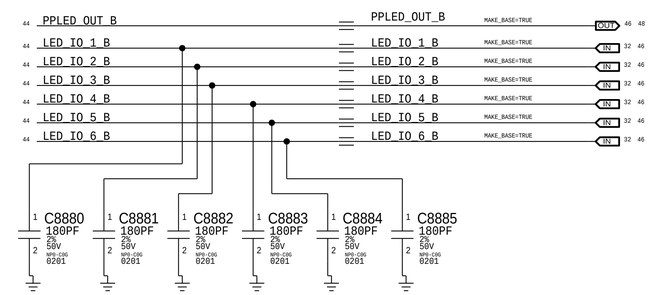

DIODE ALTERNATE

PART NUMBER	ALTERNATE FOR PART NUMBER	BOM OPTION	REF DES	COMMENTS:

SYNC_MASTER=J171/MLB_B SYNC_DATE=10/24/2018

PAGE TITLE
BEACON2

Apple Inc.

DRAWING NUMBER 051-04464 SIZE D

REVISION 4.0.0

BRANCH

PAGE 88 OF 121

SHEET 44 OF 48

NOTICE OF PROPRIETARY PROPERTY:
THE INFORMATION CONTAINED HEREIN IS THE PROPRIETARY PROPERTY OF APPLE INC.
THE POSESSOR AGREES TO THE FOLLOWING:
I TO MAINTAIN THIS DOCUMENT IN CONFIDENCE
II NOT TO REPRODUCE OR COPY IT
III NOT TO REVEAL OR PUBLISH IT IN WHOLE OR PART
IV ALL RIGHTS RESERVED

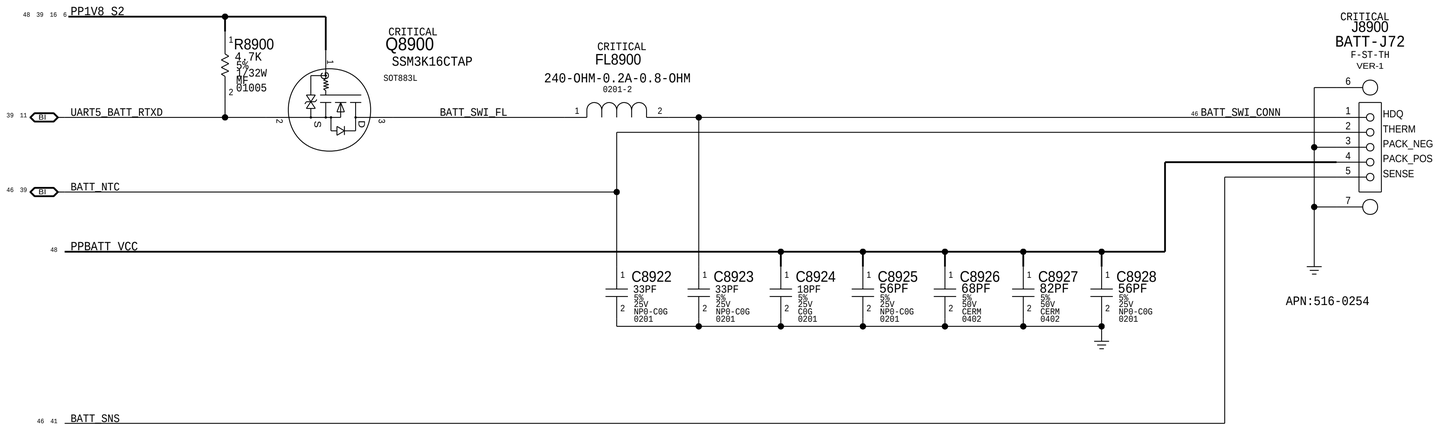

SYNC_MASTER=J171/MLB_B SYNC_DATE=10/24/2018

PAGE TITLE

POWER: BATTERY CONNECTOR

Apple Inc.

DRAWING NUMBER 051-04464 SIZE D

REVISION 4.0.0

BRANCH

PAGE 89 OF 121

SHEET 45 OF 48

NOTICE OF PROPRIETARY PROPERTY:

THE INFORMATION CONTAINED HEREIN IS THE PROPRIETARY PROPERTY OF APPLE INC.
THE POSESSOR AGREES TO THE FOLLOWING:
I TO MAINTAIN THIS DOCUMENT IN CONFIDENCE
II NOT TO REPRODUCE OR COPY IT
III NOT TO REVEAL OR PUBLISH IT IN WHOLE OR PART
IV ALL RIGHTS RESERVED

AUDIO

TP9300	GPIO_CODEC_IRQ_L	8 18
TP931B	GPIO_SOC2CODEC_RST_L	11 18
TP9304	GPIO_CODEC_TO_PMU_WAKE_L	18 39
TP9320	CONN_HP_HEADSET_DET_FILT	17 18
TP9321	CONN_HP_HS3_FILT	17 18
TP9322	CONN_HP_HS3_REF_FILT	17 18
TP9323	CONN_HP_HS4_FILT	17 18
TP9324	CONN_HP_HS4_REF_FILT	17 18
TP9325	CONN_HP_LEFT_FILT	17 18 46
TP9326	CONN_HP_RIGHT_FILT	17 18 46
TP93O4	CONN_HP_LEFT_FILT	17 18 46
TP93O5	CONN_HP_RIGHT_FILT	17 18 46
TP9337	GND_AUDIO_CODEC	18
TP93MC	DMIC1_FF_SCLK_FILT	17
TP9309	DMIC1_FF_SD_FILT	17
TP931C	MIKEY_TS_N	16 18
TP931D	MIKEY_TS_P	16 18
TP93H5	SPKRAMP_L1_OUT_N	19 30
TP93H6	SPKRAMP_L1_OUT_P	19 30
TP9370	SPKRAMP_L2_OUT_N	19 30
TP9371	SPKRAMP_L2_OUT_P	19 30
TP93H7	SPKRAMP_R1_OUT_N	20 30
TP93H8	SPKRAMP_R1_OUT_P	20 30
TP93MA	SPKRAMP_R2_OUT_N	20 30
TP93MB	SPKRAMP_R2_OUT_P	20 30
TP9393	PP1V8_S2_VA_VCP	38 48

BUTTONS

TP9338	GPIO_BTN_HOME_CONN_L	31
TP9339	GPIO_BTN_ONOFF_L_FILT	24
TP9341	GPIO_BTN_VOL_DOWN_L_FILT	24
TP9342	GPIO_BTN_VOL_UP_L_FILT	24

CAMERAS

TP93JA	PP2V9_CAM	38 48
TP930A	PP2V9_AVDD_CAM_FRONT_FILT	25
TP93J3	PP2V9_AVDD_CAM_REAR_FILT	26
TP93B1	PP2V6_CAM_REAR_AF_FILT	26
TP93A7	PP1V8_SW1	38 48
TP9301	PP1V8_CAM_FRONT_FILT	25
TP93NB	PP1V8_CAM_REAR_FILT	26
TP93JC	PP1V25_CAM_REAR_FILT	26
TP93B0	ISP0_CAM_REAR_CLK	8 26
TP9353	ISP0_CAM_REAR_SCL	8 26
TP9354	ISP0_CAM_REAR_SDA	8 26
TP9355	ISP0_CAM_REAR_SHUTDOWN_L	8 26
TP93JB	ISP1_CAM_FRONT_CLK_F	25
TP93JE	ISP1_CAM_FRONT_SCL_F	25
TP93JF	ISP1_CAM_FRONT_SDA_F	25
TP93HE	ISP1_CAM_FRONT_SHUTDOWN_L_F	25

DISPLAY

TP9372	LED_IO_1_A	32 44
TP9373	LED_IO_2_A	32 44
TP9374	LED_IO_3_A	32 44
TP9375	LED_IO_4_A	32 44
TP9376	LED_IO_5_A	32 44
TP9377	LED_IO_6_A	32 44
TP9378	LED_IO_1_B	32 44
TP9379	LED_IO_2_B	32 44
TP937A	LED_IO_3_B	32 44
TP937B	LED_IO_4_B	32 44
TP937C	LED_IO_5_B	32 44
TP937D	LED_IO_6_B	32 44
TP9305	PPLED_OUT_A	44 48
TP93JD	PPLED_OUT_B	44 48
TP93DB	PPLED_BACK_REG_B	32 46
TP93D0	PPLED_BACK_REG_A	32 46
TP93O0	PPLED_BACK_REG_B	32 46
TP93O1	PPLED_BACK_REG_A	32 46

POWER

TP9391	PP0V8_S2_SOC_AOP	38 48
TP9389	PP1V1_S2	43 48
TP9390	PP1V1_S1_EXT_SW	42 48
TP9388	PP1V2_SOC	38 48
TP93A3	PP1V2_PLL_SOC	15
TP93A5	PP1V2_PLL_CPU	15
TP9395	PP1V8_ALWAYS	38 48
TP93A0	PP1V8_EXT_SW1	42 48
TP93A4	PP1V8_S2	37 48
TP93A6	PP1V8_S2_SW3	38 48
TP93A2	PP1V8_TOUCH_EXT_SW	42 48
TP93A9	PP1V1_XTAL	6
TP93C1	PP3V0_S2_TRISTAR	38 48
TP93C3	PP3V3_ACC	38 48
TP93C4	PP3V3_S2	37 48
TP93C5	PP3V3_EXT_SW	42 48
TP93D5	PPVCC_MAIN	16 41 48
TP93D6	PPVCC_MAIN_LCD_SW_CONN	32
TP93D7	PPVDD_CPU	37 48
TP93D8	PPVDD_GPU	37 39 48
TP93D9	PPVDD_S1_SOC	37 48
TP93C9	PPBATT_VCC	41 46 48
TP93CA	PPBATT_VCC	41 46 48
TP93CB	PPBATT_VCC	41 46 48
TP93CC	PPBATT_VCC	41 46 48
TP93CD	PPBATT_VCC	41 46 48
TP93CE	PPBATT_VCC	41 46 48
TP9340		
TP9336		
TP9392		
TP9394		
TP9396		
TP9397		
TP9398		
TP9399		
TP939A		
TP939B		
TP93N7	PPVDD_CPU_SRAM	37 48
TP93N8	PPVDD_GPU_SRAM	43 48
TP93N9	PPVDD_S1_FIXED	43 48
TP93NA	PP0V9_NAND	38 48
TP93NE	BATT_SWI_CONN	45
TP93NF	BATT_SNS	41 45

SENSORS

TP93J9	PP3V0_ALS	38 48
TP93E	PP1V8_PHOS_F	23
TP937F	PP1V825_S2_MESA_CONN	21 31
TP931E	PP3V1_S2_MESA_CONN	21 31
TP931F	PP16V0_MESA_CONN	21
TP93N4	GPIO_MESA_TO_BOOST_ENABLE_CONN	21 31
TP93N5	PP1V8_S2_HALL_BUTTON_CONN	24
TP930C	GPIO_HALL_BUTTON_TO_PMU_IRQ	24 39
TP93N2	GPIO_HALL_AJ_TO_PMU_IRQ	17 39

THERMAL

TP9303	BATT_NTC	39 45
TP9312	BOARD_TEMP3_P	39
TP9313	BOARD_TEMP4_P	39
TP9314	BOARD_TEMP5_P	39
TP9315	BOARD_TEMP6_P	39
TP9316	BOARD_TEMP7_P	39
TP9317	BOARD_TEMP8_P	39

SOC

	TP93G9	SOC_TESTMODE	4 6
	TP9311	AP_JTAG_TDO	6
NEAR U0600	TP9314	UART_DEBUG_TO_SOC_TX	11 16
NEAR U1700	TP9315	UART_SOC_TO_DEBUG_TX	11 16
NEAR U0600	TP9318	UART_ACC_TO_SOC_TX	11 16
NEAR U1700	TP9319	UART_SOC_TO_ACC_TX	11 16
	TP93J0	USB_SOC_N	6 16
	TP93J1	USB_SOC_P	6 16
	TP9360	JTAG_SOC_SEL	4 6
	TP9361	JTAG_SOC_TCK	6 16
	TP9362	AP_JTAG_TDI	6
	TP9363	JTAG_SOC_TMS	6 16
	TP9364	AP_JTAG_TRST_L	6
	TP933A	USB_ID	6
	TP9343	GPIO_FORCE_DFU	11 39
	TP93G6	RESET_PMU_TO_SYSTEM_L	6 12 39
NEAR U0600	TP9384	CLK_PMU_TO_AOP_32K	12 39
NEAR U8100	TP9329 (P4MM SM)	SPI_SOC_TO_PMU_SCLK	10 39 47
	TP93NC	SOCHOT0_PMU_TO_SOC_L	10 39
	TP93ND	TP_GPIO_DFU_STATUS	11

E75

TP93N0	CONN_DET_L	30
TP93D1	PPOUT_E75_ACC_ID1_CONN	30 46
TP93D2	PPOUT_E75_ACC_ID2_CONN	30 46
TP93O2	PPOUT_E75_ACC_ID1_CONN	30 46
TP93O3	PPOUT_E75_ACC_ID2_CONN	30 46
TP93D4	PPVBUS_USB_FILT	30 41
TP93DA	PPVBUS_E75_USB_CONN	30 46
TP93DC	PPVBUS_E75_USB_CONN	30 46
TP93DD	PPVBUS_E75_USB_CONN	30 46
TP93DE	PPVBUS_E75_USB_CONN	30 46
TP9330	E75_DPAIR1_CONN_N	30
TP9331	E75_DPAIR1_CONN_P	30
TP9332	E75_DPAIR2_CONN_N	30
TP9333	E75_DPAIR2_CONN_P	30
TP93O6	PPVDD_ACC_FET	16
TP93O7	PPVBUS_USB_RVP	16 41
TP93O8	PPVBUS_SYS	16 41

DELETE ONE IF CAN'T PLACE

TOUCH

TP9328	GPIO_SOC_TO_BT_TO_TOUCH_TS_SYNC	11 27 28 33
TP9344	GPIO_GRAPE_IRQ_L	11 27
TP9346	GPIO_TOUCH_TO_BT_SYNC	27 33
TP9345	GPIO_GRAPE_RST_L	11 27 28
TP9307	CLK_KONA_M_24MHZ	27
TP9308	PP3V3_TOUCH_EXT_SW	42 48
TP930B	PP15V0_TOUCH_FILT	27 28
TP930E	PP2V8_KONA_M_VDDANA	27
TP930F	SWD_KONA_SWCLK	12 27
TP9310	SWD_KONA_SWDIO	12 27
TP9311	AP_DISP_TOUCH_BSYNC1_R	27
TP9319	KONA_M_GPIO_12	27
TP931A	KONA_M_GPIO_13	27
NEAR U4000 TP93H1	SPI_GRAPE_CS_L	10 27
NEAR U0600 TP93H2	SPI_GRAPE_MISO	10 27
NEAR U4000 TP93H3	SPI_GRAPE_MOSI	10 27
NEAR U4000 TP93H4	SPI_GRAPE_SCLK	10 27

DUMMY RF TEST POINTS

TP93FA	TP_UART_BB_TO_AOP_TXD
TP93F9	TP_UART_AOP_TO_BB_TXD
TP93F8	TP_I2S_SOC_TO_BB_LRCK
TP93F7	TP_I2S_SOC_TO_BB_DOUT
TP93E2	TP_I2S_BB_TO_SOC_DOUT
TP93F6	TP_I2S_SOC_TO_BB_BCLK
TP93E1	TP_AP_TO_BB_RESET_L

WIFI TEST POINTS

NEAR U7500	TP93K0	PCIE_SOC2WLAN_TX_P	33 35
NEAR U7500	TP93K1	PCIE_SOC2WLAN_TX_N	33 35
NEAR U0600	TP93K2	90_AP_PCIE3_RXD_C_P	7 33
NEAR U0600	TP93K3	90_AP_PCIE3_RXD_C_N	7 33
	TP93M4	PMU_GPIO_CLK_32K_WLAN	33 35 46
NEAR U7500	TP93K5	UART2_SOC2WLAN_TX	11 33
NEAR U0600	TP93K6	UART2_WLAN2SOC_TX	11 33
NEAR U0600	TP93K8	UART2_WLAN2SOC_RTS_L	11 33
	TP93K9	PMU_GPIO_WLAN_REG_ON	33 35
	TP93KA	GPIO_PMU2BT_REG_ON	35
	TP93KC	GPIO_SOC2WLAN_PCIE_DEV_WAKE	11 33 35
NEAR U7500	TP93KD	UART2_SOC2WLAN_RTS_L	11 33
	TP93KE	TP_JTAG_WLAN_TMS	33
	TP93KF	JTAG_WLAN_TRST	33
	TP93L2	PMU_GPIO_BT_HOST_WAKE	33 35
	TP93L3	GPIO_SOC2BT_WAKE	11 35
NEAR U7500	TP93L4	UART_SOC2BT_TX	11 35
NEAR U0600	TP93L5	UART_BT2SOC_TX	11 35
NEAR U7500	TP93L6	UART_SOC2BT_RTS_L	11 35
NEAR U0600	TP93L7	UART_BT2SOC_RTS_L	11 35
	TP9365	JTAG_WLAN_SEL	35
	TP93LC	AOP2RADIO_CONTEXT_A	12 33
	TP93LD	AOP2RADIO_CONTEXT_B	12 33
	TP93LE	PMU_GPIO_WLAN_HOST_WAKE	33 35
	TP93M1	AP_PCIE_CLKREQ3_L	7 33
	TP93M0	AP_PCIE_RESET3_L	7 33
	TP93M3	TESTPOINT_JTAG_WLAN_TCK	33

TP -> PP

TP93K4 (P4MM SM)	PMU_GPIO_CLK_32K_WLAN	33 35 46

STANDOFF P/N 806-19627

STD9302
STDOFF-3.3X1.8R-0.89H-TH-0.32-1.6
BATTERY

860-1595

STD9300
STDOFF-3.3X1.8R1.17H-SM-1
GRAPE

STD9301
STDOFF-3.3X1.8R1.17H-SM-1
DISPLAY

STD9303
STDOFF-3.3X1.8R1.17H-SM-1
BATTERY

STD9350
STDOFF-3.3X1.8R1.17H-SM-1

STD9360
STDOFF-3.3X1.8R1.17H-SM-1
BUTTON FLEX

PLATED THROUGH HOLES
DRILL SIZE: 1.1MM X 0.4MM
PLATING SIZE: 1.4MM X 0.7MM

SL9303
TH-NSP
SL-1.1X0.4-1.4X0.7

SYNC_MASTER=J171/MLB_B SYNC_DATE=10/24/2018

PAGE TITLE
TEST: TP/HOLES/FIDUCIALS

Apple Inc.

DRAWING NUMBER 051-04464 SIZE D
REVISION 4.0.0
BRANCH
PAGE 93 OF 121
SHEET 46 OF 48

NOTICE OF PROPRIETARY PROPERTY:
THE INFORMATION CONTAINED HEREIN IS THE PROPRIETARY PROPERTY OF APPLE INC.
THE POSESSOR AGREES TO THE FOLLOWING:
I TO MAINTAIN THIS DOCUMENT IN CONFIDENCE
II NOT TO REPRODUCE OR COPY IT
III NOT TO REVEAL OR PUBLISH IT IN WHOLE OR PART
IV ALL RIGHTS RESERVED

EE CHARACTERIZATION PP

NAND

PLACE NEAR U0601	PP9402 P4MM SM	1	90_PCIE_AP_TO_NAND_REFCLK_P	5 7
	PP9403 P4MM SM	1	90_PCIE_AP_TO_NAND_REFCLK_N	5 7
	PP9434 P4MM SM	1	CLK_SOC_TO_NAND_24MHZ	5 10

PMU/BEACON2 SPI/DWI

PLACE NEAR U8100	PP9407 P4MM SM	1	SPI_SOC_TO_PMU_DATA	10 39
PLACE NEAR U8801	PP9408 P4MM SM	1	DWI_SOC_TO_BEACON2_CLK	10 44
	PP9409 P4MM SM	1	DWI_SOC_TO_BEACON2_DATA	10 44
PLACE NEAR U0600	PP940A P4MM SM	1	SPI_SOC_TO_PMU_SCLK	10 39 46
	PP940B P4MM SM	1	SPI_PMU_TO_SOC_DATA	10 39

	PP9441 P4MM SM	1	GPIO_AOP_TO_PMU_SLEEP1_REQUEST	12 39
	PP9442 P4MM SM	1	GPIO_PMU_TO_SYS_SLEEP1_READY	12 14 39
	PP9443 P4MM SM	1	GPIO_AOP_TO_PMU_ACTIVE_REQUEST	12 39
	PP9444 P4MM SM	1	GPIO_PMU_TO_SYSTEM_ACTIVE_READY	6 12 16 39

AUDIO

PLACE NEAR U1900	PP9421 P4MM SM	1	I2S0_SOC_TO_BELFIELD_MCK	10 18
PLACE NEAR U1900	PP9422 P4MM SM	1	I2S0_SOC_TO_BELFIELD_BCLK	10 18
PLACE NEAR U1900	PP9423 P4MM SM	1	I2S0_SOC_TO_BELFIELD_LRCK	10 18
PLACE NEAR U1900	PP9424 P4MM SM	1	I2S0_SOC_TO_BELFIELD_DOUT	10 18
PLACE NEAR U0600	PP9425 P4MM SM	1	I2S0_BELFIELD_TO_SOC_DOUT	10 18
PLACE NEAR U1900	PP9426 P4MM SM	1	SPI_BELFIELD_SCLK	10 18
PLACE NEAR U1900	PP9427 P4MM SM	1	SPI_BELFIELD_MOSI	10 18
PLACE NEAR U0600	PP9428 P4MM SM	1	SPI_BELFIELD_MISO	10 18
PLACE NEAR U1900	PP9460 P4MM SM	1	I2S_AOP_TO_CODEC_BCLK	12 18
PLACE NEAR U1900	PP9461 P4MM SM	1	I2S_AOP_TO_CODEC_LRCK	12 18
PLACE NEAR U1900	PP9462 P4MM SM	1	I2S_AOP_TO_CODEC_DOUT	12 18
PLACE NEAR U0600	PP9463 P4MM SM	1	I2S_CODEC_TO_AOP_DOUT	12 18
PLACE NEAR U2040	PP9464 P4MM SM	1	I2S2_SOC_TO_SPKRAMP_BCLK_L1	19
PLACE NEAR U2040	PP9465 P4MM SM	1	I2S2_SOC_TO_SPKRAMP_LRCK_L1	19
PLACE NEAR U2040	PP9466 P4MM SM	1	I2S2_SOC_TO_SPKRAMP_DOUT_L1	19

SENSORS

PLACE NEAR U2590	PP9429 P4MM SM	1	SPI_AOP_SCLK	12 17 23 47
PLACE NEAR U2590	PP9430 P4MM SM	1	SPI_AOP_MOSI	12 17 23 47
PLACE NEAR U2580	PP9431 P4MM SM	1	SPI_AOP_SCLK	12 17 23 47
PLACE NEAR U2580	PP9432 P4MM SM	1	SPI_AOP_MOSI	12 17 23 47
PLACE NEAR U0600	PP9433 P4MM SM	1	SPI_AOP_MISO	12 17 23

MESA SPI

PLACE NEAR U0600	PP940C P4MM SM	1	SPI_MESA_MISO	10 21

CAMERA - FRONT

PLACE NEAR U0600	PP940D P4MM SM	1	MIPI1C_CAM_FRONT_CLK_P	8 25 47
	PP940E P4MM SM	1	MIPI1C_CAM_FRONT_CLK_N	8 25 47
	PP940F P4MM SM	1	MIPI1C_CAM_FRONT_DATA_P<0>	8 25 47
	PP9410 P4MM SM	1	MIPI1C_CAM_FRONT_DATA_N<0>	8 25 47

CAMERA - REAR

PLACE NEAR U0600	PP9411 P4MM SM	1	MIPI0C_CAM_REAR_CLK_P	8 26 47
	PP9412 P4MM SM	1	MIPI0C_CAM_REAR_CLK_N	8 26 47
	PP9413 P4MM SM	1	MIPI0C_CAM_REAR_DATA_P<0>	8 26 47
	PP9414 P4MM SM	1	MIPI0C_CAM_REAR_DATA_N<0>	8 26 47

WIFI

PLACE NEAR U7500	PP9417 P4MM SM	1	90_AP_PCIE3_REFCLK_P	7 33
	PP9418 P4MM SM	1	90_AP_PCIE3_REFCLK_N	7 33

SOC

	PP9450 P4MM SM	1	ADC_SOC_TO_PMU_VDD_CPU	13 39
	PP9451 P4MM SM	1	AP_VSS_CPU_SENSE	13
	PP9452 P4MM SM	1	ADC_SOC_TO_PMU_VDD_GPU	13 39
	PP9453 P4MM SM	1	AP_VSS_SENSE	13
	PP9480 P4MM SM	1	PMU_TO_AP_BUF_BTN_HOME_L	11 39
	PP9481 P4MM SM	1	PMU_TO_AP_BUF_BTN_ONOFF_L	11 39

TOUCH

	PP9454 P4MM SM	1	TP_KONA_S_UART_RX	28
	PP9455 P4MM SM	1	TP_KONA_S_UART_TX	28
	PP9456 P4MM SM	1	TP_KONA_IPC_EVENT_0	28
	PP9457 P4MM SM	1	TP_KONA_IPC_EVENT_1	28
	PP9458 P4MM SM	1	TP_KONA_IPC_EVENT_2	28
	PP9459 P4MM SM	1	TP_KONA_IPC_EVENT_3	28
	PP945A P4MM SM	1	TP_KONA_IPC_EVENT_4	28
	PP945B P4MM SM	1	TP_KONA_IPC_EVENT_5	28
	PP945C P4MM SM	1	KONA_S_TO_KONA_M_RESET_DET_L	27 28
	PP945D P4MM SM	1	KMSI_MISO	27 28
	PP945E P4MM SM	1	KMSI_MOSI	27 28
	PP945F P4MM SM	1	KMSI_STRB_IN	27 28
	PP9470 P4MM SM	1	KMSI_STRB_OUT	27 28
	PP9471 P4MM SM	1	PSE_SYNC	27 28

HIGH SPEED, NO TEST

MIPI	MIPI0C_CAM_REAR_CLK_P	NO_TEST=1	8 26 47
MIPI	MIPI0C_CAM_REAR_CLK_N	NO_TEST=1	8 26 47
MIPI	MIPI0C_CAM_REAR_DATA_P<0..3>	NO_TEST=TRUE	8 26 47
MIPI	MIPI0C_CAM_REAR_DATA_N<0..3>	NO_TEST=TRUE	8 26 47
MIPI	MIPI0C_CAM_REAR_CLK_FILT_P	NO_TEST=1	26
MIPI	MIPI0C_CAM_REAR_CLK_FILT_N	NO_TEST=1	26
MIPI	MIPI0C_CAM_REAR_DATA_FILT_P<0..3>	NO_TEST=TRUE	26
MIPI	MIPI0C_CAM_REAR_DATA_FILT_N<0..3>	NO_TEST=TRUE	26
MIPI	MIPI1C_CAM_FRONT_CLK_P	NO_TEST=1	8 25 47
MIPI	MIPI1C_CAM_FRONT_CLK_N	NO_TEST=1	8 25 47
MIPI	MIPI1C_CAM_FRONT_DATA_P<0>	NO_TEST=1	8 25 47
MIPI	MIPI1C_CAM_FRONT_DATA_N<0>	NO_TEST=1	8 25 47
MIPI	MIPI1C_CAM_FRONT_CLK_FILT_P	NO_TEST=1	25
MIPI	MIPI1C_CAM_FRONT_CLK_FILT_N	NO_TEST=1	25
MIPI	MIPI1C_CAM_FRONT_DATA_FILT_P<0>	NO_TEST=1	25
MIPI	MIPI1C_CAM_FRONT_DATA_FILT_N<0>	NO_TEST=1	25
MIPI	EDP_DATA_P<0..3>	NO_TEST=TRUE	9 32
MIPI	EDP_DATA_N<0..3>	NO_TEST=TRUE	9 32
MIPI	EDP_DATA_EMI_P<0..3>	NO_TEST=TRUE	32
MIPI	EDP_DATA_EMI_N<0..3>	NO_TEST=TRUE	32
MIPI	EDP_DATA_EMI_CONN_P<0..3>	NO_TEST=TRUE	32
MIPI	EDP_DATA_EMI_CONN_N<0..3>	NO_TEST=TRUE	32

SYNC_MASTER=J171/MLB_B SYNC_DATE=10/24/2018

PAGE TITLE

TEST: EE TP/PP

Apple Inc.

DRAWING NUMBER 051-04464 SIZE D

REVISION 4.0.0

BRANCH

PAGE 94 OF 121

SHEET 47 OF 48

NOTICE OF PROPRIETARY PROPERTY:

THE INFORMATION CONTAINED HEREIN IS THE PROPRIETARY PROPERTY OF APPLE INC.
THE POSESSOR AGREES TO THE FOLLOWING:

I TO MAINTAIN THIS DOCUMENT IN CONFIDENCE

II NOT TO REPRODUCE OR COPY IT

III NOT TO REVEAL OR PUBLISH IT IN WHOLE OR PART

IV ALL RIGHTS RESERVED

POWER CONNECTIONS

BUCK0 (ACTIVE)

46 37 PPVDD_CPU (MAKE_BASE=TRUE, VOLTAGE=1.0V) — PPVDD_CPU 12400MA 13

BUCK1 (SW CONTROL)

46 39 37 PPVDD_GPU (MAKE_BASE=TRUE, VOLTAGE=0.8V) — PPVDD_GPU 8300MA 13

BUCK2 (SLEEP1)

46 37 PPVDD_S1_SOC (MAKE_BASE=TRUE, VOLTAGE=0.9V) — PPVDD_S1_SOC 1524MA 13

BUCK3 (SLEEP2)

46 37 PP1V8_S2 (MAKE_BASE=TRUE, VOLTAGE=1.8V)

- PP1V8_S2 100MA 15
- PP1V8_S2 1MA 16
- PP1V8_S2 1MA 17 24
- PP1V8_S2 8MA 6 16 39 45
- PP1V8_S2 42
- PP1V8_S2 36.4MA 38
- PP1V8_S2 430MA 38
- PP1V8_S2 60MA 16
- PP1V8_S2 1MA 34
- PP1V8_S2 20MA 33
- PP1V8_S2 25.5MA 18

BUCK3_SW

BUCK3_SW1 (ACTIVE)

46 38 PP1V8_SW1 (MAKE_BASE=TRUE, VOLTAGE=1.8V)

- PP1V8_SW1 0MA 42
- PP1V8_SW1 1MA 25
- PP1V8_SW1 1MA 26

BUCK3_EXT_SW1 (ACTIVE)

46 42 PP1V8_EXT_SW1 (MAKE_BASE=TRUE, VOLTAGE=1.8V)

- PP1V8_EXT_SW1 9MA 15
- PP1V8_EXT_SW1 2MA 8
- PP1V8_EXT_SW1 8MA 6
- PP1V8_EXT_SW1 20MA 5 12
- PP1V8_EXT_SW1 315MA 10
- PP1V8_EXT_SW1 5MA 4 7 8 10 39
- PP1V8_EXT_SW1 10MA 6
- PP1V8_EXT_SW1 4MA 44
- PP1V8_EXT_SW1 10MA

BUCK3_SW3 (SLEEP2)

46 38 PP1V8_S2_SW3 (MAKE_BASE=TRUE, VOLTAGE=1.8V)

- PP1V8_S2_SW3 5MA 23
- PP1V8_S2_SW3 1.2MA 23
- PP1V8_S2_SW3 16MA 17
- PP1V8_S2_SW3 9MA 15
- PP1V8_S2_SW3 ??? 17

BUCK3 EXT SW TOUCH

46 42 PP1V8_TOUCH_EXT_SW (MAKE_BASE=TRUE, VOLTAGE=1.8V) — PP1V8_TOUCH_EXT_SW 12 27 28

BUCK4 (SLEEP2)

46 43 PP1V1_S2 (MAKE_BASE=TRUE, VOLTAGE=1.1V)

- PP1V1_S2 638MA 42
- PP1V1_S2 1051MA 38
- PP1V1_S2 0MA 38
- PP1V1_S2 1300MA 14

BUCK4_EXT_SW (SLEEP1)

46 42 PP1V1_S1_EXT_SW (MAKE_BASE=TRUE, VOLTAGE=1.1V)

- PP1V1_S1_EXT_SW 635MA 14
- PP1V1_S1_EXT_SW 3MA 14
- PP1V1_S1_EXT_SW 6

BUCK5 (SLEEP1)

46 43 PPVDD_S1_FIXED (MAKE_BASE=TRUE, VOLTAGE=0.9V)

- PPVDD_S1_FIXED 7
- PPVDD_S1_FIXED 11MA 8
- PPVDD_S1_FIXED 1430MA 14
- PPVDD_S1_FIXED 6

BUCK6 (SLEEP2)

46 37 PP3V3_S2 (MAKE_BASE=TRUE, VOLTAGE=3.3V)

- PP3V3_S2 1160MA 33
- PP3V3_S2 42

EXT SW (ACTIVE)

46 42 PP3V3_EXT_SW (MAKE_BASE=TRUE, VOLTAGE=3.3V) — PP3V3_EXT_SW 1100MA 5

TOUCH EXT SW (SW CONTROL)

46 42 PP3V3_TOUCH_EXT_SW (MAKE_BASE=TRUE, VOLTAGE=3.3V) — PP3V3_TOUCH_EXT_SW 27

BUCK7 (ACTIVE)

46 37 PPVDD_CPU_SRAM (MAKE_BASE=TRUE, VOLTAGE=1.00V) — PPVDD_CPU_SRAM 354MA 13

BUCK8 (SW CONTROL)

46 43 PPVDD_GPU_SRAM (MAKE_BASE=TRUE, VOLTAGE=0.92V) — PPVDD_GPU_SRAM 360MA 13

LDO1 (SLEEP2)

46 38 PP3V0_S2_TRISTAR (MAKE_BASE=TRUE, VOLTAGE=3.0V) — PP3V0_S2_TRISTAR 3MA 16

LDO2

46 38 PP1V8_S2_VA_VCP (MAKE_BASE=TRUE, VOLTAGE=1.8V) — PP1V8_S2_VA_VCP 10MA 18

LDO3

38 PP3V3_USB (MAKE_BASE=TRUE, VOLTAGE=3.3V) — PP3V3_USB 5MA 6

LDO4 (SW CONTROL)

46 38 PP3V0_ALS (MAKE_BASE=TRUE, VOLTAGE=3.0V) — PP3V0_ALS 1MA 25

LDO5 (SPARE)

LDO6 (SW CONTROL)

46 38 PP3V3_ACC (MAKE_BASE=TRUE, VOLTAGE=3.3V) — PP3V3_ACC 1000MA 16

LDO7 (SPARE)

15MA

LDO8 (SLEEP2)

38 PP3V1_S2_MESA (MAKE_BASE=TRUE, VOLTAGE=3.05V) — PP3V1_S2_MESA 73MA 21 22

LDO9 (SW CONTROL)

38 PP1V25_REAR_CAM (MAKE_BASE=TRUE, VOLTAGE=1.25V) — PP1V25_REAR_CAM 360MA 26

LDO10 (ACTIVE)

46 38 PP0V9_NAND (MAKE_BASE=TRUE, VOLTAGE=0.9V) — PP0V9_NAND 1007MA 5

LDO11 (ACTIVE)

38 PP2V6_CAM_AF (MAKE_BASE=TRUE, VOLTAGE=2.6V) — PP2V6_CAM_AF 80MA 26

LDO13 (ACTIVE)

46 38 PP2V9_CAM (MAKE_BASE=TRUE, VOLTAGE=2.1V)

- PP2V9_CAM 47MA 26
- PP2V9_CAM 25

LDO14 (ACTIVE)

46 38 PP1V2_SOC (MAKE_BASE=TRUE, VOLTAGE=1.2V)

- PP1V2_SOC 1MA 9
- PP1V2_SOC 22MA 15
- PP1V2_SOC 37MA 7

LDO015 (SLEEP2)

46 38 PP0V8_S2_SOC_AOP (MAKE_BASE=TRUE, VOLTAGE=0.8V) — PP0V8_S2_SOC_AOP 44MA 14

LDO016 (SLEEP2)

38 PP1V825_S2_MESA (MAKE_BASE=TRUE, VOLTAGE=1.9V) — PP1V825_S2_MESA 1MA 21

1V2_BUFF (ACTIVE)

39 PP1V2_BUFF (MAKE_BASE=TRUE, VOLTAGE=1.2V) — PP1V2_BUFF 1MA 15

CHARGER MAIN

46 41 16 PPVCC_MAIN (MAKE_BASE=TRUE, VOLTAGE=4.5V)

- PPVCC_MAIN 2930MA 37
- PPVCC_MAIN 2741MA 37
- PPVCC_MAIN 449MA 37
- PPVCC_MAIN 37
- PPVCC_MAIN 1264MA 38
- PPVCC_MAIN 237MA 32
- PPVCC_MAIN 1371MA 44
- PPVCC_MAIN 5MA 22
- PPVCC_MAIN 300MA 33 35
- 1000MA
- PPVCC_MAIN 40 42
- PPVCC_MAIN 5-10MA 34
- PPVCC_MAIN 16
- PPVCC_MAIN 27
- PPVCC_MAIN 18 19 20

BATTERY

46 41 PPBATT_VCC (MAKE_BASE=TRUE, VOLTAGE=4.7V) — PPBATT_VCC 2890MA 45

ON_BUF

46 38 PP1V8_ALWAYS (MAKE_BASE=TRUE, VOLTAGE=1.8V) — PP1V8_ALWAYS 10 39

BACKLIGHT BOOST

46 44 PPLED_OUT_A (MAKE_BASE=TRUE, VOLTAGE=26V) — PPLED_OUT_A 150MA 32

46 44 PPLED_OUT_B (MAKE_BASE=TRUE, VOLTAGE=26V) — PPLED_OUT_B 32

SYNC_MASTER=J171/MLB_B SYNC_DATE=10/24/2018

PAGE TITLE: POWER: ALIASES

Apple Inc.

DRAWING NUMBER: 051-04464 SIZE: D

REVISION: 4.0.0

BRANCH

PAGE: 121 OF 121

SHEET: 48 OF 48

NOTICE OF PROPRIETARY PROPERTY:

THE INFORMATION CONTAINED HEREIN IS THE PROPRIETARY PROPERTY OF APPLE INC.
THE POSESSOR AGREES TO THE FOLLOWING:
I TO MAINTAIN THIS DOCUMENT IN CONFIDENCE
II NOT TO REPRODUCE OR COPY IT
III NOT TO REVEAL OR PUBLISH IT IN WHOLE OR PART
IV ALL RIGHTS RESERVED